TM 11-6625-2753-14&P

TECHNICAL MANUAL

OPERATOR'S, ORGANIZATIONAL, DIRECT SUPPORT, AND GENERAL SUPPORT MAINTENANCE MANUAL INCLUDING REPAIR PARTS LIST

FOR

TEST SET, TELEPHONE TS-3483/U (NORTHEAST ELECTRONICS MODEL TTS-4CR) (NSN 6625-00-115-3006)

HEADQUARTERS, DEPARTMENT OF THE ARMY
SEPTEMBER 1978

WARNING

DANGEROUS VOLTAGES EXIST IN THE EQUIPMENT

Dangerous potentials exist at several points throughout this equipment. When the equipment is operated with the covers removed DO NOT touch exposed connections or components. Disconnect power before cleaning the equipment or replacing parts.

TECHNICAL MANUAL

No. 11-6625-2753-14&P

TM 11-6625-2753-14&P
HEADQUARTERS
DEPARTMENT OF THE ARMY
WASHINGTON, DC. 7 September 1978

OPERATOR'S, ORGANIZATIONAL, DIRECT SUPPORT, AND GENERAL SUPPORT MAINTENANCE MANUAL INCLUDING REPAIR PARTS LIST FOR TEST SET, TELEPHONE TS-[illegible], U (NOMENCLATURE OF ELECTRONICS MODEL TTS-4CM) (NSN 6625-00-715-[illegible])

REPORTING OF ERRORS

You can improve this manual by recommending improvements using DA Form [illegible]-2 located in the back of the manual. Simply tear out the self-addressed form, fill it out as shown on the sample, fold it where shown, and drop it in the mail.

If there are no blank DA Form [illegible]-2 in the back of your manual, use the standard DA Form [illegible] (Recommended Changes to Publications and Blank Forms) and forward to Commander, US Army Communications and Electronics Material Readiness Command, ATTN: DRSEL-MA-Q, Fort Monmouth, New Jersey 07703. A reply will be furnished direct to you.

This manual is an authentication of the manufacturer's commercial literature and does not conform with the format and content specified in AR 310-3, Preparation, Coordination, and Approval of Department of the Army Publications. This manual does, however, contain available information that is essential to the operation and maintenance of the equipment.

LIST OF ILLUSTRATIONS

LIST OF TABLES

SECTION 0

INTRODUCTION

0-1. SCOPE

This manual contains instructions for the operation and organizational, direct support, and general support maintenance of Test Set, Telephone TS-3483/U.

0-2. INDEXES OF PUBLICATIONS.

a. DA Pum 310-4. Refer to the latest issue of DA Pum 310-4 to determine whether there are new editions, changes, or additional publications pertaining to the equipment.

b. DA Pum 310-7. Refer to DA Pum 310-7 to determine whether there are modification work orders (MWO's) pertaining to the equipment.

0-3. FORMS AND RECORDS

a. Reports of Maintenance and Unsatisfactory Equipment. Maintenance forms, records, and reports which are to be used by maintenance personne at all maintenance levels are listed in and prescribed by TM 38-750.

b. Report of Packaging and Handling Deficiencies. Fill out and forward DD Form 6 (Packaging Improvement Report) as prescribed in AR 700-58.

c. Discrepancy in Shipment Report (DISREP) (SP 361). Fill out and forward Discrepancy in Shipment Report (DISREP) (SF 361) as prescribed in AR 55-38.

0-4. REPORTING EQUIPMENT IMPROVEMENT RECOMMENDATIONS (KIR).

EIR's will be prepared using DA Form 2407, Maintenance Request. Instructions for preparing EIR's are provided in TM 38-750, The Army Maintenance Management System. EIR's should be mailed direct to Commander, US Army Communications and Electronics Materiel Readiness Command, ATTN: DRSEL-MA-Q, Fort Monmouth, New Jersey 07703. A reply will be furnished direct to you.

0-5. ADMINISTRATIVE STORAGE.

Refer to section VI for storage procedures.

0-6. DESTRUCTION OF ARMY ELECTRONIC MATERIAL.

Destruction of Army electronics materiel to prevent enemy use shall be in accordance with TM 750-244-2.

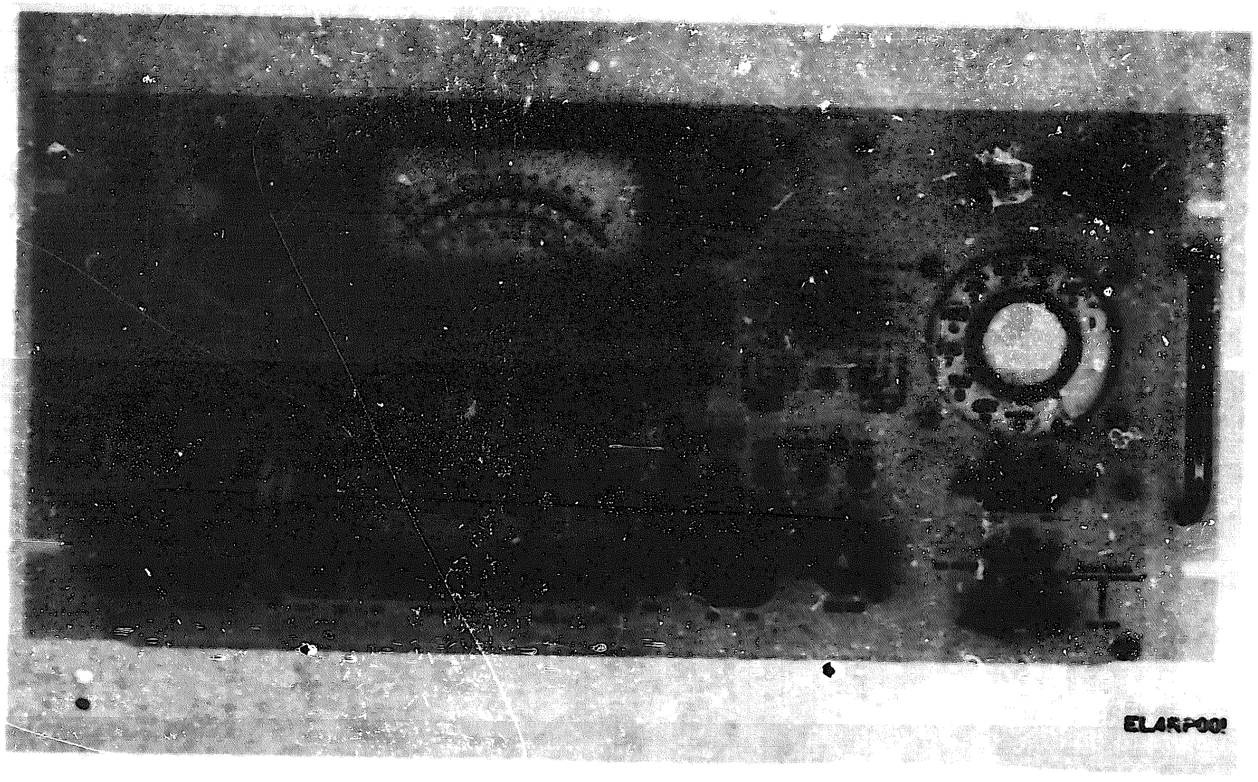

Figure 1-1. Pac Set. Telephone TS-348SU

FIE

SECTION I
EQUIPMENT FUNCTIONS

1-1. GENERAL. General. The TS-3483/U (TTS-4CR) (Fig. 1-1) is a rack mounted, transistorized self-contained transmission test set manufactured by Northeast Electronics Corporation, Concord, New Hampshire. The TTS-4CR is designed to perform transmission, noise and voltage measurements over a wide range of telecommunications circuits ranging from local exchange circuits to 4-wire toll and special service circuits. The set operates in a frequency range from 30 Hz to 560 kHz.

1-2. The set contains an oscillator, level measuring circuits, filter, precision terminations, impedance matching circuits, talk and monitor circuits, hold coils and switching facilities which are provided to conveniently select the various combinations of features. The set can be operated on 115 volts AC (50 to 400 Hz) or from central office battery (-20 to -70 volts DC).

1-3. PERFORMANCE CHARACTERISTICS

1-4. SEND SECTION.

a. Frequency Range.

(1). Variable: Dial marked 50 Hz to 560 Hz. Ranges: X1, X10, X100 and X1000. Provides continuous adjustment of frequency from 50 Hz to 560 kHz.

(2). Fixed: Switch marked 30, 40, 50, 80, 100, 160, 200, 240, 250, 280, 320 and 400 Hz. Ranges: X1, X10 and X100. Provides fixed frequency settings of 30 Hz to 60 kHz.

b. Frequency Accuracy.

(1). Variable: ±5% of dial setting.

(2). Fixed: ±2%.

c. Frequency Response.

(1).	75 ohms	±0.5 dB	50 Hz to 560 kHz
(2).	135, 150 ohms	±0.5 dB	5 kHz to 560 kHz
		±0.25 dB	5 kHz to 250 kHz
(3).	600, 900 ohms	±0.5 dB	50 Hz to 50 kHz
		±0.25 dB	100 Hz to 50 kHz

d. Level Range.

(1). Attenuator Steps: +10, +7, 0, -3, -10, -16, -20, -25, -30, -35 and -40 dB.

(2). Vernier: +1 dB, -7 dB variable from any of the above steps.

e. Level Adjustment. In CAL position the receive section is used to mea sound level.

f. Attenuator Accuracy. (1 kHz reference) ±0.15 dB.

g. Total Harmonic Distortion. Less than 1% at any frequency.

h. Output Impedance.

(1). 600, 900 ohms ±5% 30 Hz to 10 kHz; phase angle less than 5 degrees.

(2). 135, 150 ohms ±5% to 100 kHz; phase angle less than 5 degrees. ±10% 100 kHz to 560 kHz phase angle less than 10 degrees.

(3). 75 ohms ±5% 30 Hz to 560 kHz; phase angle less than 10 d

i. Output Balance.

(1). 600, 900 ohms 100 Hz greater than 90 dB
3 kHz greater than 70 dB

(2). 135, 150 ohms 4 kHz greater than 50 dB
560 kHz greater than 30 dB

j. Output Circuit.

(1). 75 ohms - no DC blocking.

(2). 135, 150, 600 and 900 ohms DC blocked (±15 volts DC).

1-5. RECEIVE SECTION.

a. Accuracy.

(1). ±0.1 dB (1000 Hz, 0 dBm 600 ohms 25 degrees C ± 10 degrees C).

(2). ±0.2 dB (1000 Hz, 0 dBm 600 ohms 0 degrees C 50 degrees C).

b. Step Attenuator Accuracy. (Reference to 0 dB)

(1). ±0.15 dB/step, maximum accumulated to -55 dB.

(2). ±0.2 dB to -60 dB.

c. Meter Tracking.

(1). ±0.1 dB from 0 dB to ±1.0 dB
from 0 dB to ±2.0 dB
from 0 dB to ±3.0 dB
(2). ±0.2 dB from 0 dB to -5.0 dB
(3). ±0.5 dB from 0 dB to -10.0 dB

d. Overload Margin. Approximately 5 dB above full scale meter reading for all ranges.

e. Balanced Bridging Input Impedance (1020 Hz).

(1). 200 K ohms without transformer.

(2). 20 K ohms with transformer.

f. Frequency Response. Refer to table 1-1 and figures 1-2(a) through (k).

g. Input Impedance.

(1). 75 ohms ±5% 1 kHz to 1 MHz phase angle less than 5 degrees: ±10% 100 Hz to 1 MHz phase angle less than 20 degrees.
(2). 135, 150 ohms ±5% 500 Hz to 50 kHz phase angle less than 5 degrees; ±10% 100 Hz to 100 kHz phase angle less than 15 degrees.
(3). 600, 900 ohms ±5% 100 Hz to 10 kHz phase angle less than 5 degrees; ±10% 100 Hz to 100 kHz phase angle less than 20 degrees.

h. Balance (Common mode rejection).

(1). 135, 150 ohms 70 dB 200 Hz to 1 kHz.
50 dB 1 kHz to 100 kHz.
40 dB 100 kHz to 500 kHz.
(2). 600, 900 ohms 50 dB 100 Hz to 1 kHz.
40 dB 1 kHz to 100 kHz.

i. Weighting Network Frequency Response.

(1). Temperature. 25 degrees C
(2). C Message:
Reference 0 dB @ 1 kHz
-3 dB from 570 Hz to 750 Hz and 2.1 kHz to 2.9 kHz.
-40 dB from 90 Hz to 150 Hz and 4.8 kHz to 7.2 kHz.
(3). CCITT:
Reference 0 dB @ 800 Hz
-3 dB from 570 Hz to 750 Hz and 2.1 kHz to 2.9 kHz.
-40 dB from 90 Hz to 150 Hz and 4.8 kHz to 7.2 kHz.

1-6. PHYSICAL CHARACTERISTICS.

a. Size (including dust cover).

(1). Width - 19 inches.
(2). Height - 8 3/4 inches.
(3). Depth - 9 1/4 inches.

b. Weight. 29 pounds.

c. Mounting. Designed for rack mounting.

d. Environmental Requirements. Designed for use in a central office environment relatively dust free and under controlled temperature and humidity conditions.

e. Temperature Range.

(1) Operating: 0 degrees C to plus 60 degrees C.

(2) Nonoperating: Minus 55 degrees C to plus 70 degrees C.

1-7. LIST OF ITEMS FURNISHED

TTS-4CR Transmission Test Set.

1-8. LIST OF ITEMS REQUIRED. The following additional items are needed for operation of the TTS-4CR depending on application:

a. Patch Cords. 309 ended (Quantity and length to suit application).

b. Patch Cords. 310 ended (Quantity and length to suit application).

c. Headset. 52A or equivilant.

Table 1-1.

	REC IMP	CONTROL SETTINGS: TRANS	MEAS FUNCTION	REC LEVEL	FREQUENCY RESPONSE
1-	135 ohms	OUT	RSS or AVG	+10 dB to -55 dB	±0.1 dB 100 Hz to 100 kHz ±0.2 dB 100 kHz to 500 kHz ±0.5 dB 50 Hz to 1 MHz ±3.0 dB 20 Hz to 1.5 MHz
2-	135 ohms	IN	RSS or AVG	+10 dB to -55 dB	±0.1 dB 500 Hz to 100 kHz ±0.2 dB 200 Hz to 100 kHz ±0.5 dB 100 Hz to 500 kHz ±3.0 dB 50 Hz to 1.5 MHz
3-	135 ohms	OUT	PK	+10 dB to -55 dB	±0.1 dB 500 Hz to 50 kHz ±0.2 dB 300 Hz to 80 kHz ±0.5 dB 200 Hz to 100 kHz ±3.0 dB 20 Hz to 500 kHz
4-	135 ohms	OUT	RSS or AVG	-60 dB	±0.1 dB 200 Hz to 80 kHz ±0.2 dB 100 Hz to 100 kHz ±0.5 dB 50 Hz to 200 kHz ±3.0 dB 20 Hz to 1 MHz
5-	[illegible] ohms	OUT	RSS or AVG	0 dB	±0.1 dB 500 Hz to 100 kHz ±0.2 dB 200 Hz to 500 kHz ±0.5 dB 100 Hz to 800 kHz ±3.0 dB 20 Hz to 1.5 MHz
6-	150 ohms	OUT	RSS or AVG	0 dB	±0.1 dB 100 Hz to 100 kHz ±0.2 dB 100 kHz to 400 kHz ±0.5 dB 50 Hz to 600 kHz ±3.0 dB 20 Hz to 1.5 MHz

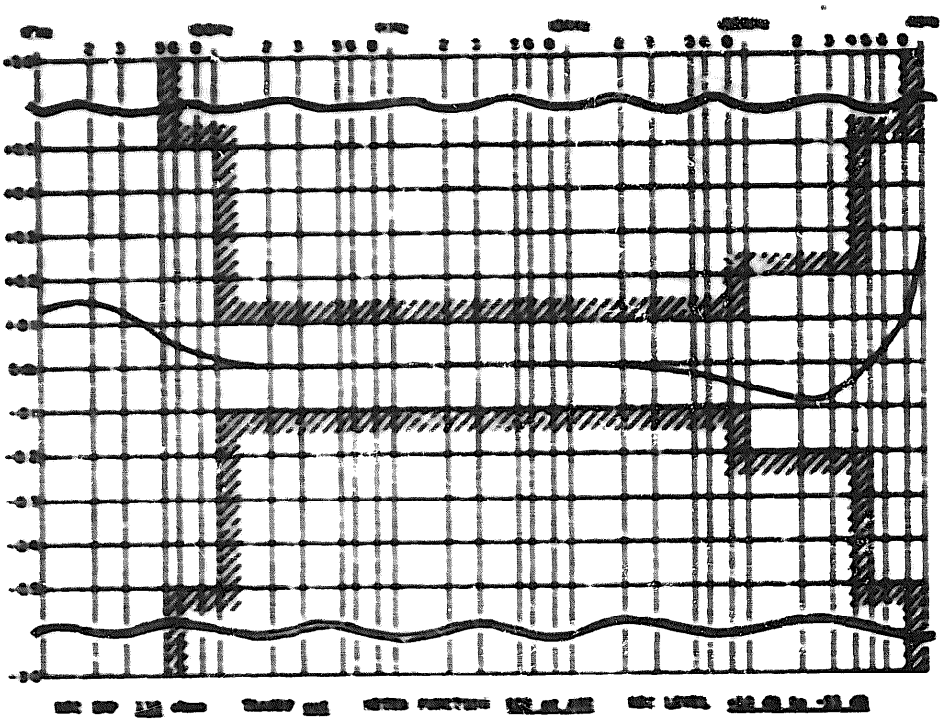

Figure 1-2(a). Typical Frequency Response Curve.

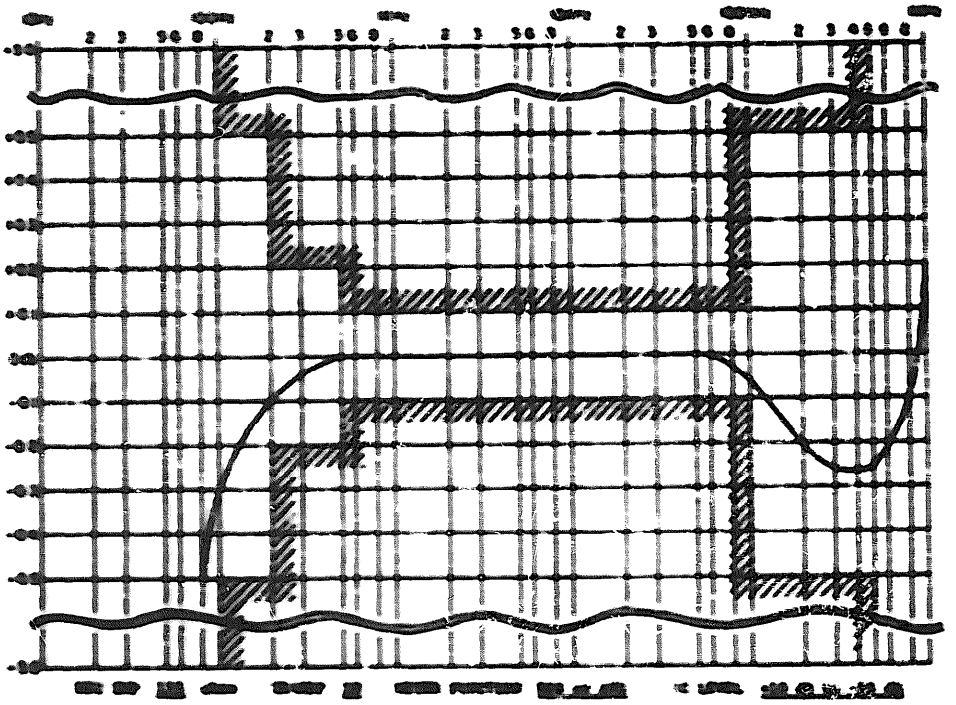

Figure 1-2(b). Typical Frequency Response Curve.

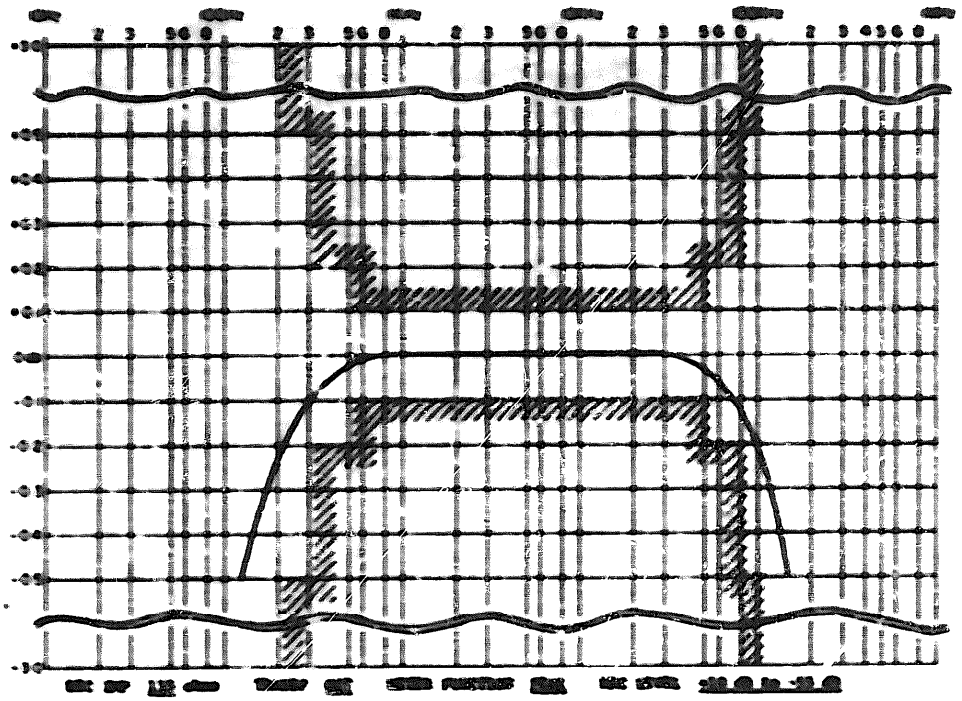

Figure 1-2(c). Frequency Response Curve.

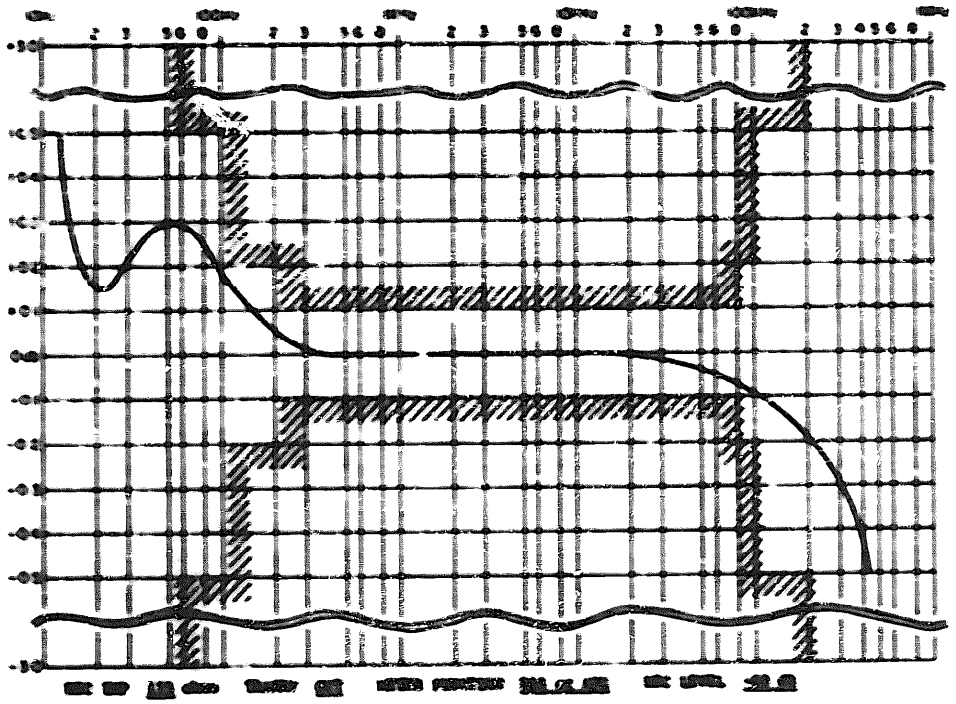

Figure 1-2(d). Typical Frequency Response Curve.

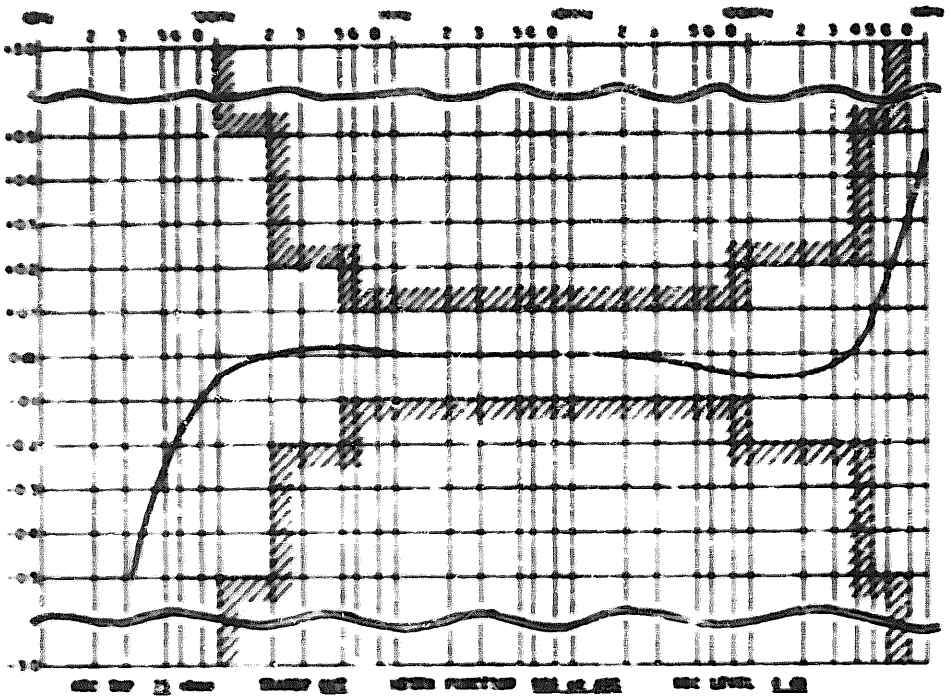

Figure 1-2(e). Typical Frequency Response Curve.

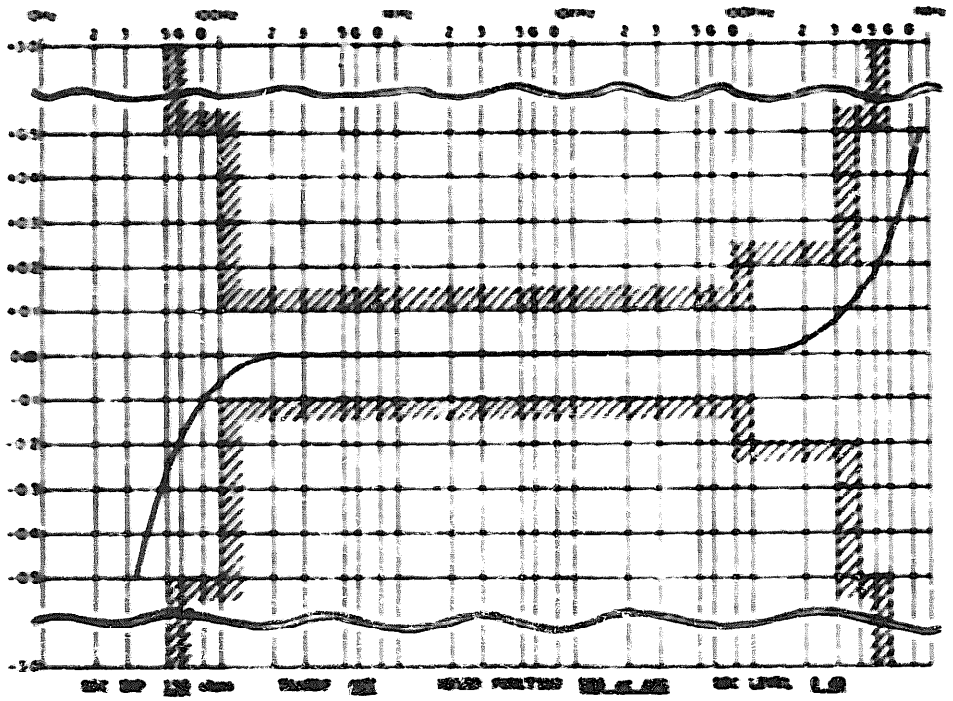

Figure 1-2(f). Typical Frequency Response Curve.

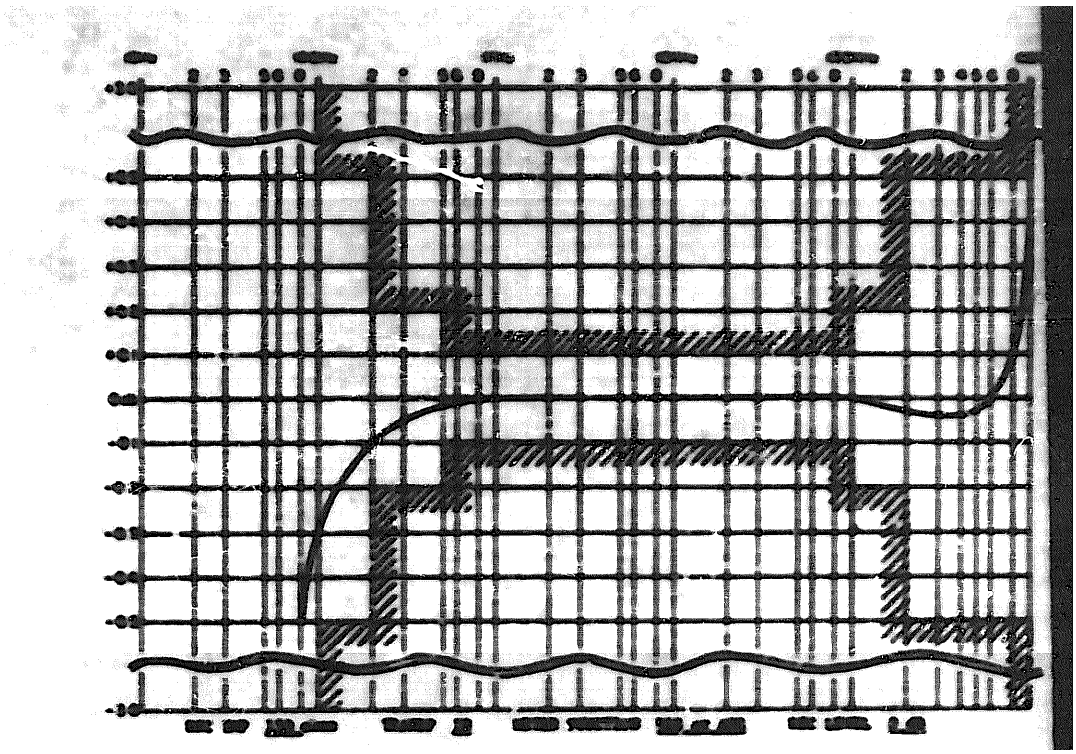

Figure 1-2(g). Typical Frequency Response Curve.

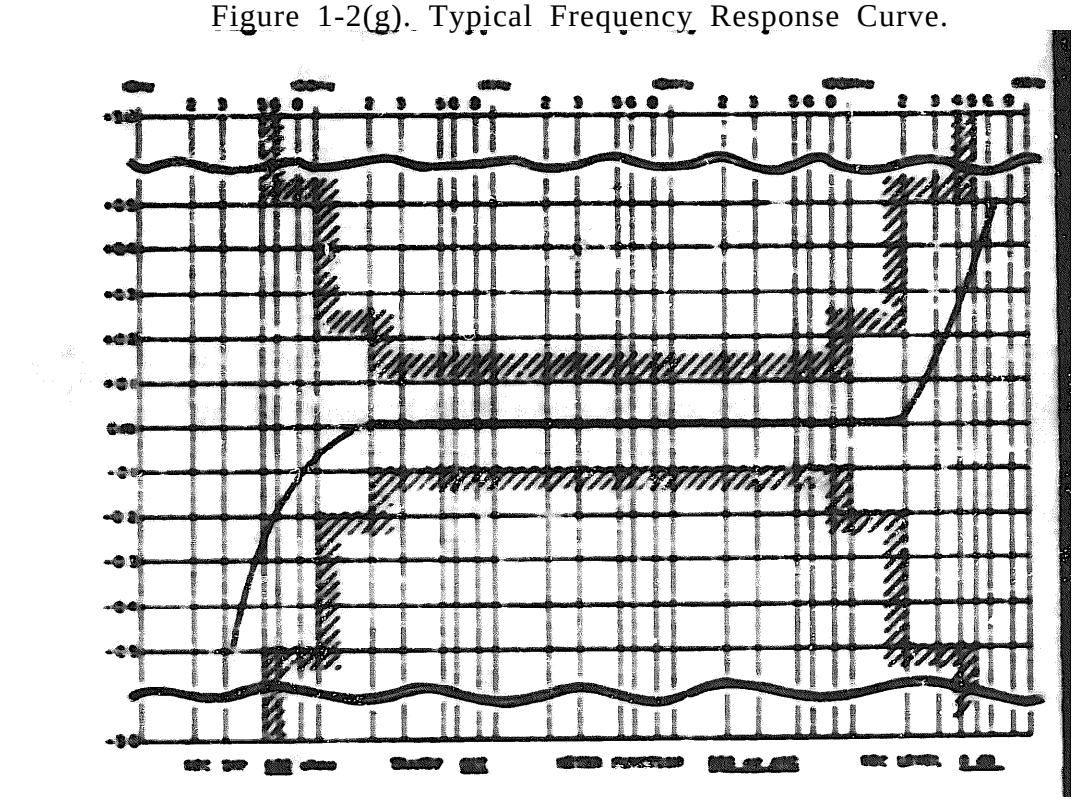

Figure 1-2(h). Typical Frequency Response Curve.

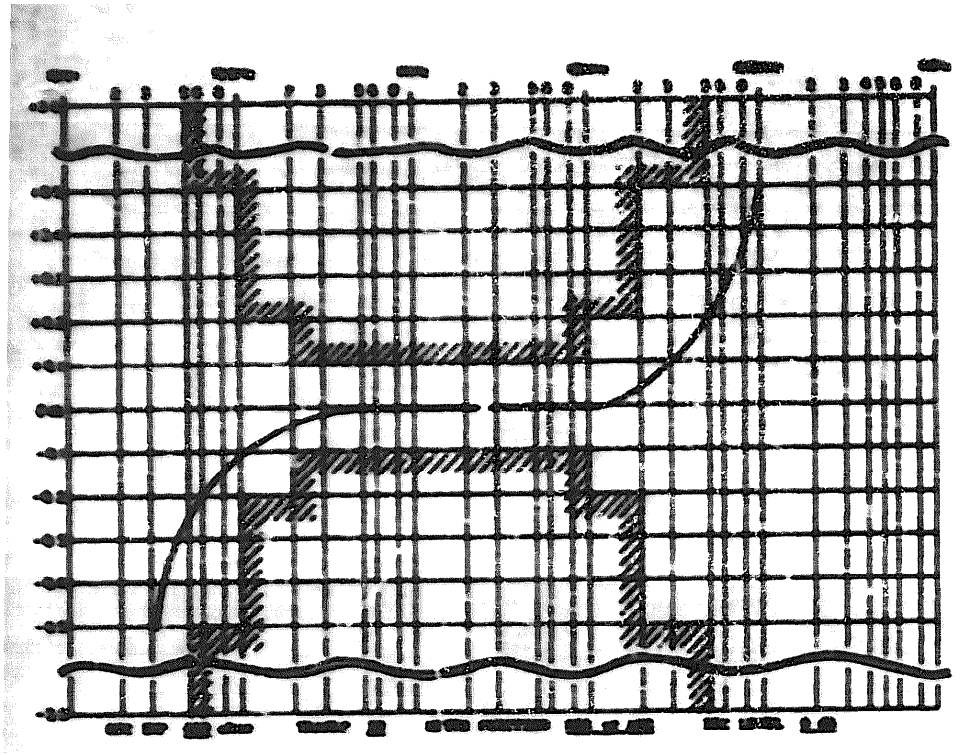

Figure 1-2(i). Typical Frequency Response Curve.

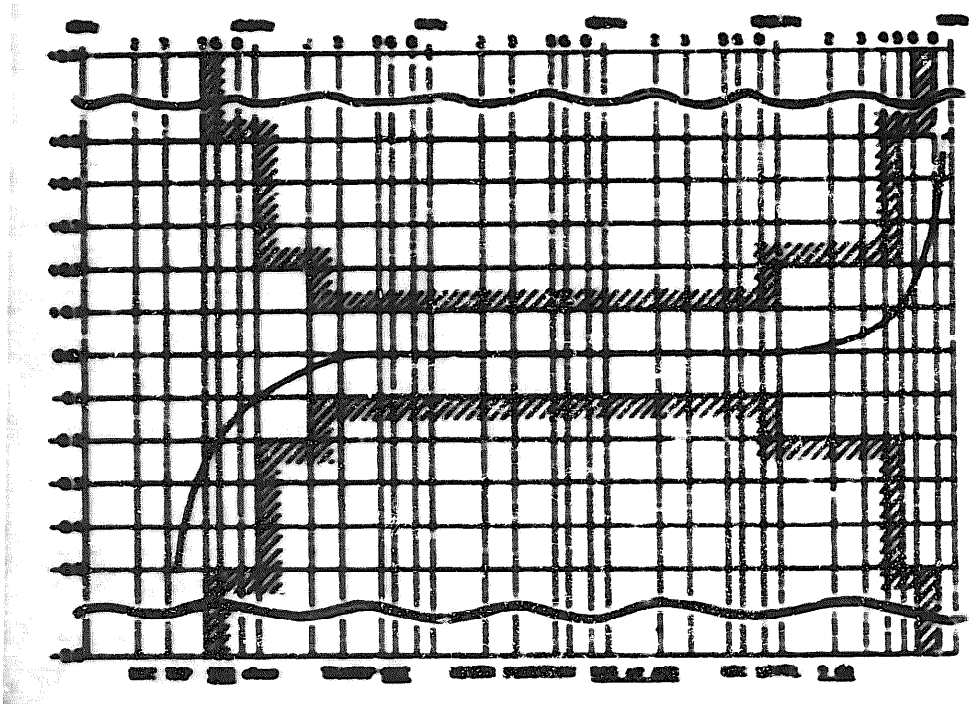

Figure 1-2(j). Typical Frequency Response Curve.

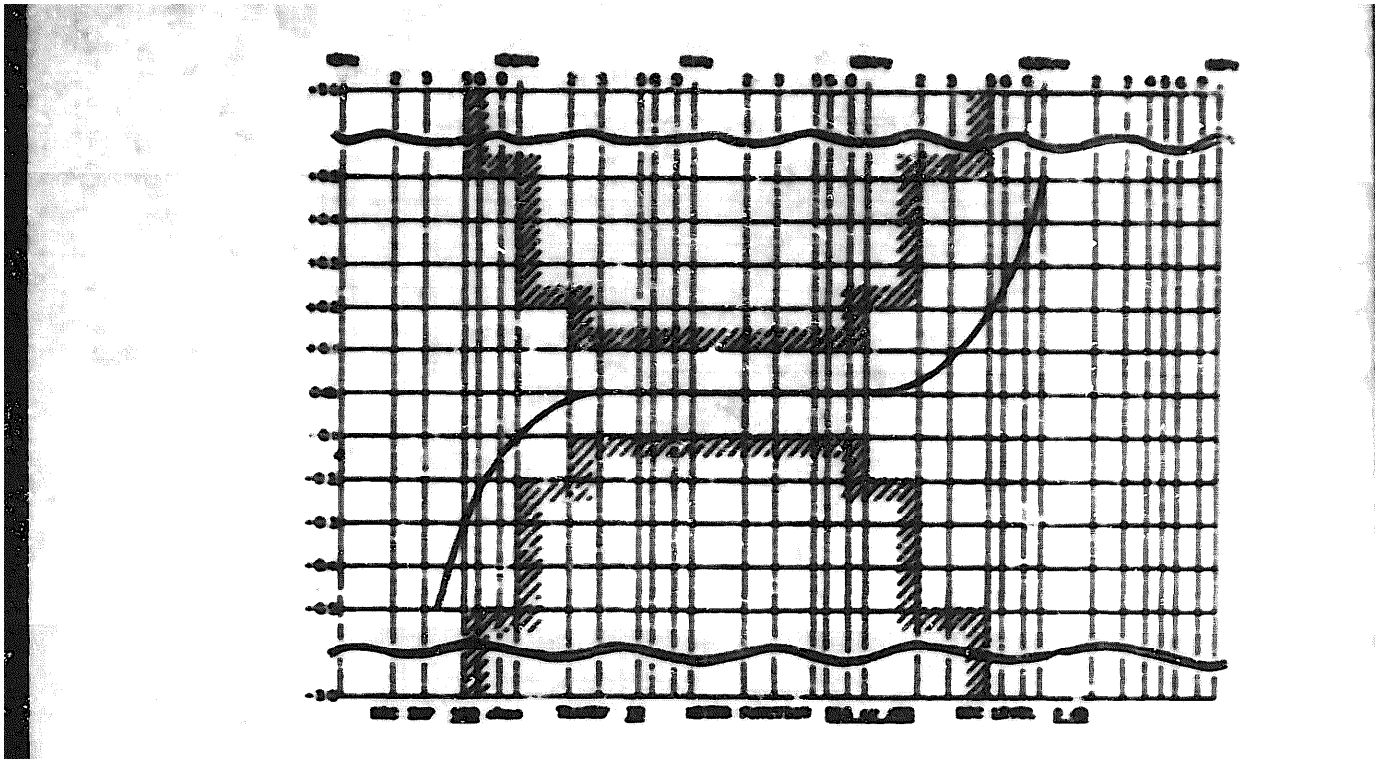

Figure 1-2(k). Typical Frequency Response Curve.

SECTION II

PREPARATION FOR USE AND INSTALLATION INSTRUCTIONS

2-1. UNPACKING. The test set is shipped from the factory in a durable water-resistant cardboard carton (22 in X 14 in X 15-3/4 in) with 2 inch shock absorbing packing material surrounding the test set wrapped in a double protective plastic covering. Open the exterior carton and remove the test set with care. Do not scratch or damage the equipment during this procedure.

2-2. INITIAL CHALKING. The initial checking of the test set consists of inspecting the unit for mechanical damage caused by rough handling during shipment. Report any damage or discrepancy in the manner prescribed for your organization.

2-3. MOUNTING. The test set is installed by inserting the unit in its assigned position in a 19 inch equipment rack. Secure the unit in the rack with 4 mounting screws to suit the equipment rack.

2-4. PRIMARY POWER. Select the source of power. Connect the test set to ac or dc source as follows. Leave the power switch (S17) in the OFF position when connecting power.

a. 115 VAC Power (50 to 400 Hz). To operate on ac, insert the special power cord which is provided into the three pin receptacle (J19) at the back of the unit and the other side into an ac outlet.

b. DC Power (-20 to -70 volts). First insert a 310 equipped cord into the battery jack (J18) at the back of the unit and then connect the other side to the source of power. Any central office battery with a voltage between -20 and -70 volts may be used. When disconnecting the set, first remove the cord from the source of power and then remove it from the set.

CAUTION

Do not change the sequence of connecting or disconnecting the dc power cord.

SECTION III

GENERAL THEORY OF OPERATION

3-1. RECEIVE SECTION (Fig. FO-1, FO-2, 3-5 and 3-6). The receive section contains: three amplifiers connected in tandem, level controls, impedance selection and termination selection devices and provisions for inserting noise measuring circuits.

3-2. The first amplifier is a differential amplifier which provides suppression of longitudinal components for input levels below -10 dBm. For higher levels of these components further suppression can be obtained by inserting an input transformer. A low frequency transformer which operates between 50 and 20,000 Hz is inserted in the 600 and 900 ohms positions of the REC IMP switch and a high frequency transformer is inserted in the 135 and 150 ohms positions. The high frequency transformer covers 500 to 500,000 Hz.

3-3. The input amplifier has an input impedance of 100,000 ohms and a gain of approximately 10 dB. This gain is varied by the REC IMP switch in such a way as to maintain calibration of the level measuring circuits when they are used on other impedances. The input of the receive section can be switched to provide either BRIDGING or TERMINATED operation. DC blocking is provided in all receive operations. For input levels above -20 dB, starting at -16 dB, a 30 dB fixed attenuator is inserted ahead of the input amplifier under the control of the REC LEVEL switch. The output impedance of this amplifier is less than 10 ohms.

3-4. The intermediate amplifier provides a gain which can range between 20 and 30 dB, depending on the setting of the REC LEVEL control. The input impedance of this amplifier is approximately 30,000 ohms and the output impedance approximately 600 ohms. When the NETWORK function is used, its weighted 20 dB amplifier is inserted between the input amplifier and the intermediate amplifier; the same applies to external filters. The meter amplifier can be switched to provide AVG, RSS or PK (peak) detection (FIG. 3-1). The average and peak circuits are both conventional. The peak detecting circuit is usable to 100 kHz. In the RSS position, the meter is supplied partially by the AVG and partially by the peak circuits. On a sine wave input, the three different types of detection will provide the same reading. The LEVEL VERNIER control is inserted between the intermediate amplifier and the detector amplifier.

3-5. The level meter in the basic receive section provides accurate level measurements over a frequency range from 100 to 500,000 Hz; measurements at slightly reduced accuracy can be made over the range of 50 Hz to 1 MHz. The level meter has a maximum sensitivity of -60 dBm at the 0 dBm point on the meter scale and a minimum sensitivity corresponding to +10 dBm for a 0 dBm reading. The scale is calibrated from -15 dBm to +3 dBm. Thus the total range of levels which can be measured extends from -75 dBm to +13 dBm. A weighting network, which incorporates additional gain can be switched in for noise measurements. For this application, the meter scale is also calibrated in dBrn, thereby permitting noise measurements

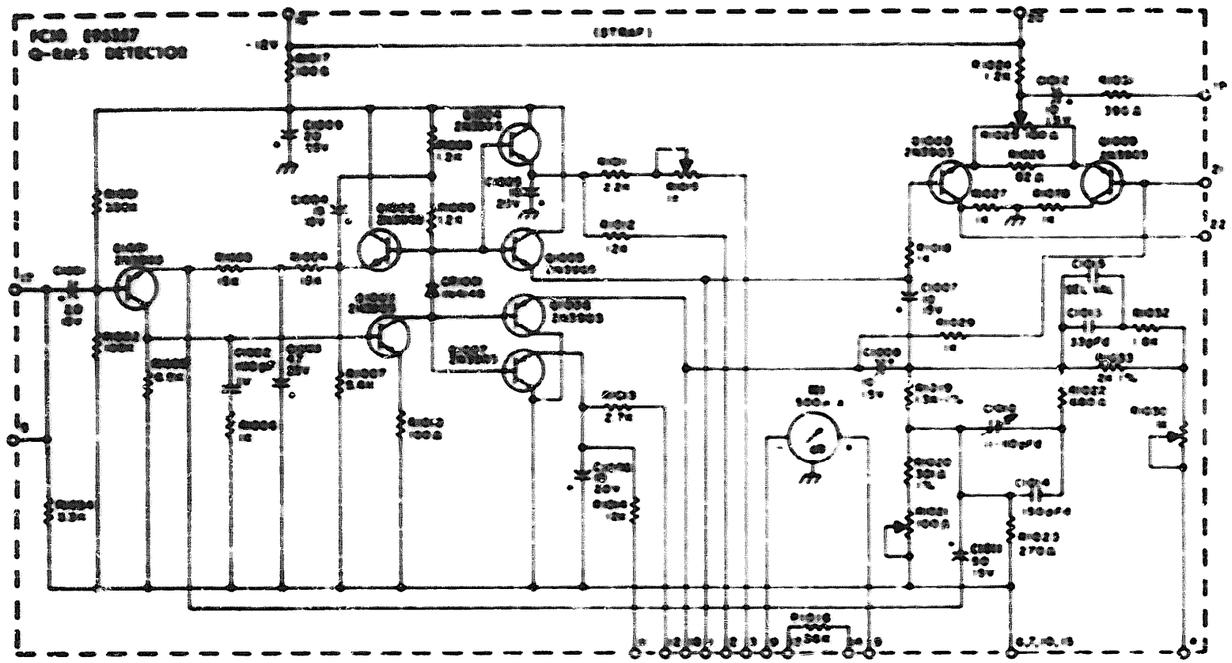

NOTE: UNLESS OTHERWISE STATED, ALL CAPACITOR VALUES ARE GIVEN IN MICROFARADS.

Figure 3-1. Detector Circuits.

from -54dBm to +63 dBm. In addition, the set provides AC voltage measurements from 100uV to 3.0V. To use the set as a voltmeter, the RECEIVE IMPEDANCE switch must be in the 600 ohms position; either the bridging or terminated mode of operation may be used in this case.

3-6. By means of the REC IMP switch, the receive section can be switched for operation on circuits with impedances of 75, 135, 150, 600 and 900 ohms and by means of the IMP switch it can be operated either in a high impedance bridging or terminated mode on circuits having these impedances. The input amplifier circuits are balanced to provide suppression of "longitudinal" components for all impedances, except 75 ohms. In addition, balanced input transformers can be switched in by means of the TRANSF switch to permit measurements on circuits with high longitudinal voltages. The REC IMP switch automatically connects a low frequency transformer to the TRANSF switch when it is in the 600 or 900 ohms position and a high frequency transformer when it is in the 135 or 150 ohms position. The receive section is provided with excellent shielding and may be isolated from the LINE and SEND circuits by positioning the REC LINE switch to DISC; in this case, the circuit to be measured is connected to the REC DIR jack or to the REC DIR T-R terminals. The terminal marked S connects to the sleeve of the REC DIR jack. When the REC LINE switch is in the CONN position, the S terminal is extended to the sleeve of the REC 310 jack and the REC DIR T-R terminals are connected to the "connect" contacts of this jack and hence to the other circuits in the test set. In addition, a chassis ground terminal marked GND is located in the receive section.

3-7. A 15-position receive attenuator rotary switch, marked REC LEVEL, is provided. It controls the overall sensitivity providing 0 dB meter readings for input levels of +10, +7, 0, -5, -10, -16, -20, -25, -30, -35, -40, -45, -50, -55 and -60dB (FIG. 3-2). The levels of +7 and -16 are provided to facilitate testing of 4-wire circuits. A LEVEL VERNIER adjustment which is controlled by means of the inside concentric control of the METER FUNCTION switch can be switched into the RECEIVE circuit. It permits any level to be read at the 0dBm position on the meter scale. This feature permits reading level deviations from any pre-determined level. The vernier control is removed from the circuit in the fully CW position of the control. (NOTE: A "click" should be felt.) The detector circuit can be switched by means of the switch marked METER FUNCTION to provide Peak, Average or RSS (quasi-RMS) readings. When measuring a sinusoidal voltage, all three methods of detection will provide the same reading.

3-8. NOISE MEASUREMENTS. For noise measurements, a weighting network which incorporates an additional 20 dB of gain can be switched in by means of the switch marked NETWORK WTG/DBRN-FLAT/DBM. This switch selects the flat response when placed in the FLAT-DBM position and a weighting response when placed in the WTG-DBRN position. The switch marked NETWORK C MSG/CCITT selects either the C message network commonly used in the USA or the CCITT weighting network. Other networks or filters can be inserted by using the jack marked EXT FIL.

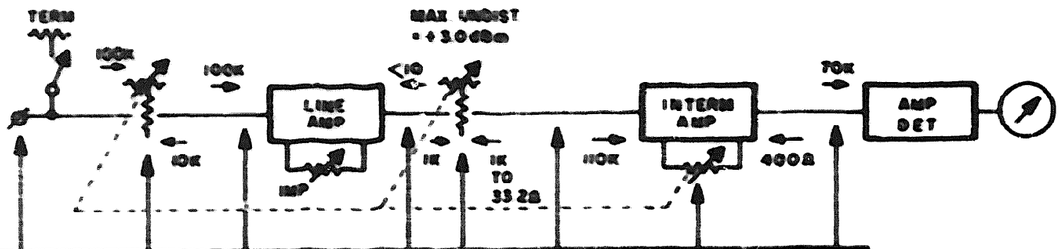

POS	LINE	LINE ATT	10 dB LINE AMP INPUT	10 dB LINE AMP OUTPUT	INTERM ATT ATT	INTERM ATT OUTPUT	INTERM AMP GAIN	AMP DET INPUT
1	+10	30	-20	-10	30	-40	20	-20
2	+ 7	30	-23	-13	30	-43	23	-20
3	0	30	-30	-20	20	-40	20	-20
4	- 5	30	-35	-25	20	-45	25	-20
5	-10	30	-40	-30	10	-40	20	-20
6	-16	30	-46	-36	10	-46	26	-20
7	-20	0	-20	-10	30	-40	20	-20
8	-25	0	-25	-15	30	-45	25	-20
9	-30	0	-30	-20	20	-40	20	-20
10	-35	0	-35	-25	20	-45	25	-20
11	-40	0	-40	-30	10	-40	20	-20
12	-45	0	-45	-33	10	-45	25	-20
13	-50	0	-50	-40	0	-40	20	-20
14	-55	0	-55	-45	0	-45	25	-20
15	-60	0	-60	-50	0	-50	30	-20

Figure 3-2. Receive Section Level Diagram.

3-9. VOLTMETER. The receive section may also be used as a voltmeter. In this application the REC IMP switch must be in the 600 ohms position. When the IMP switch is in the BRDG position, the input impedance is approximately 100,000 ohms when the TRANSF switch is in the OUT position and about 20,000 ohms when it is in the IN position. In addition, a 600 ohms termination may be added by moving the IMP switch to the TERM position.

3-10. SEND SECTION (Fig. FO-1 and FO-2). The send section consists of an extremely stable oscillator capable of generating frequencies from 30 Hz to 100 kHz and an output amplifier (fig. 3-3). Levels of +10 dBm to -40 dBm can be supplied to the output circuit through transformers which can be switched by means of the SEND IMP switch to match circuits having impedances of 75, 135, 150, 600 and 900 ohms.

3-11. A switch marked FREQ-Var/Fixed selects either the continuously variable or the fixed frequency operation. The operating frequency is selected by either the FIXED FREQ rotary switch or the VAR-FREQ continuous control in connection with the FREQ RANGE switch which is marked X1, X10, X100, X10, X100, X1000. To provide optimum level stability, two output transformers are used. The transformer which is used for the lower frequencies is switched in when the SEND IMPEDANCE switch is in the 900 and 600 ohms position. The high frequency transformer is switched in when the SEND IMPEDANCE switch is in the 150 or 135 ohms position. No transformer is provided for the 75 ohms output.

CAUTION

The 75 ohm output is not blocked for DC and must not be connected to circuits carrying DC.

The first three frequency ranges, X1, X10, X100, can be used with send impedances of 900, 600 and 75 ohms. The last three frequency ranges, X10, X100, X1000, can be used with send impedances of 150, 135, and 75 ohms. The last two frequency ranges, X100, and X1000, can be used only when the FREQ switch is in the VAR position. All other frequency ranges can be used with either fixed or variable frequencies. To prevent erroneous operation and to alert the operator, an interlock circuit interrupts the power supply to the output amplifier when an improper combination of frequency ranges and impedances has been selected.

3-12. The send level can be adjusted by means of a vernier control which is provided with a mechanical locking device and a rotary attenuator switch; these two share the designation SEND LEVEL. Unless the vernier SEND LEVEL control has been set to provide proper calibration, the level markings of the SEND LEVEL attenuator are meaningless. Thus the SEND level must be calibrated before using the instrument after the proper calibration procedure has been performed, the 10-position rotary SEND LEVEL attenuator switch provides send levels of +10, +7, 0, -5, -10, -16, -20, -25, -30, -35, and -40 dBm (FIG. 3-4). The vernier control of the SEND LEVEL also makes it possible to provide any other send level within the attenuator range. This use requires a special calibration procedure.

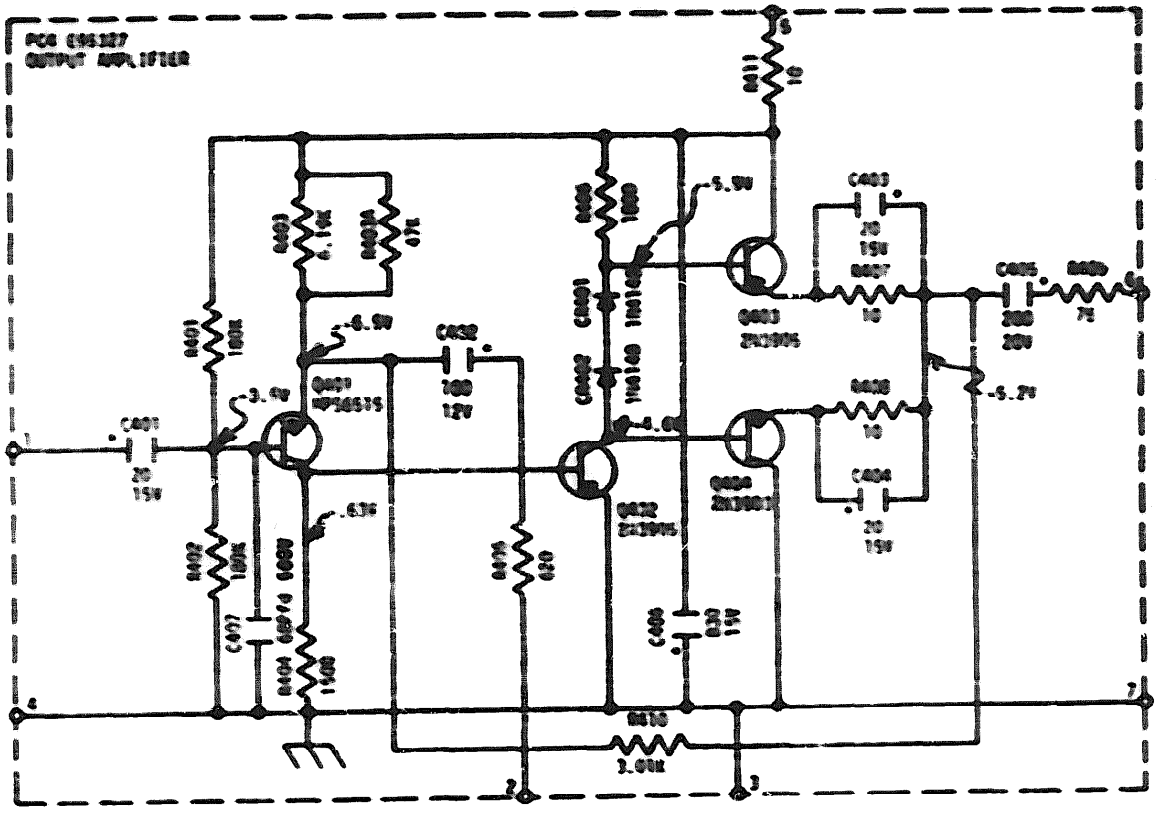

NOTE: UNLESS OTHERWISE STATED, ALL CAPACITOR VALUES ARE GIVEN IN MICROFARADS AND ALL RESISTOR VALUES ARE GIVEN IN OHMS.

Figure 3-3. Output Amplifier.

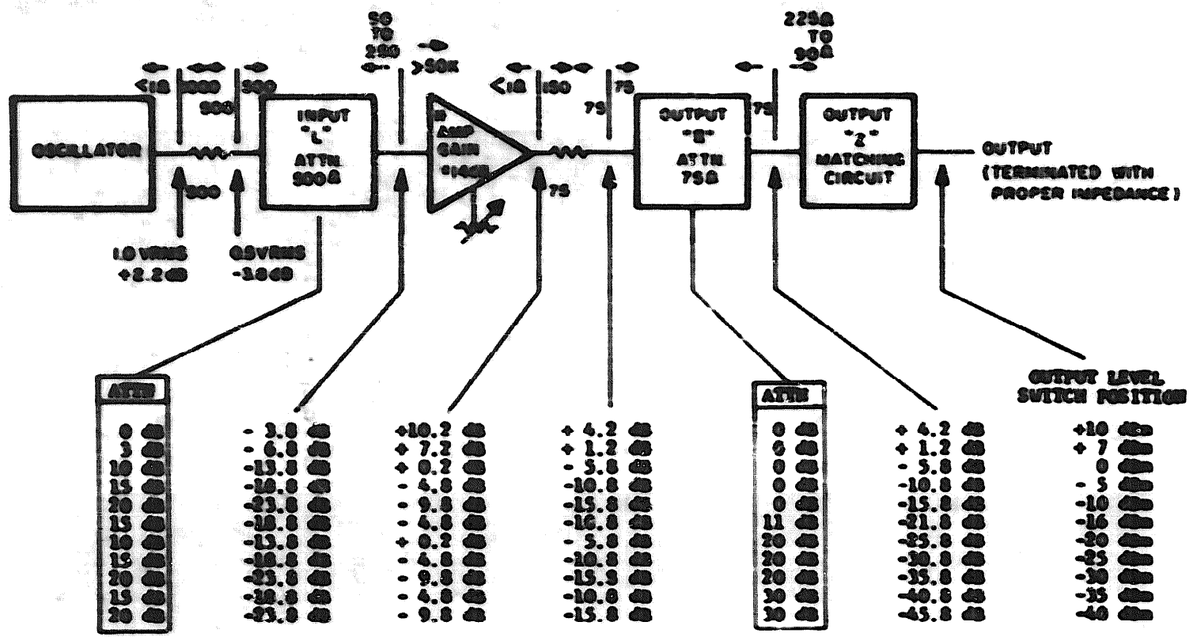

with vernier set for +10 dbm.

NOTE: dB values are relative to 600 ohms.
dbm values are relative to 75, 135, 150, 600 or 900 ohms.

Figure 3-4. Send Section Level Diagram

3-13. LINE SECTION. This group of circuits contains jacks to make connections to the 2-wire and 4-wire LINE circuits under test, TALK and MON jacks to connect a 52A or equivalent headset to the talk circuits in the set, an EXT EQPMT jack to connect external equipment to the circuit under the control of the FUNCTION and TALK MON and LINE HOLD switches and jacks to connect to the SEND circuits directly. Connections to the 2-wire LINE circuit and the SEND circuits may be made through either type 309 or 310 plugs; all other jacks use 310 type plugs.

3-14. The LINE switch is connected to the line jacks. Its function is to select the SEND, REC and TALK + EXT. Note that when in the REC position it is necessary that the REC LINE switch is in the CONN position; furthermore, the REC IMP switch should be moved to the desired impedance and the IMP switch should be moved to eit TERM or BRDG as required for the test to be made. In the send position, the desir frequency, impedance and levels should be selected. In the TALK + EXT position of the LINE switch, the line is extended through the EXT EQPMT jack to the built-in talk circuits; to use these functions it is necessary to insert a 52A or equivalent headset into the TALK & MON jacks. External equipment may be connected to the LINE by inserting a cord into the EXT EQPMT jack. This disconnects the talk circuit. In this case, the TALK-MON-LINE HOLD switch controls a hold coil across the external equipment.

3-15. The TALK-MON-LINE-HOLD switch controls the talk and hold circuits. The hold circuit on the LINE jack is interrupted in the ON HK position of this switch and is connected across the line in the two other positions of this switch, regardless of the position of the FUNCTION or LINE switches. The receiver of the 52A headset is connected to the amplifier detector circuit in the REC section when the switch is in the MON and 4W TALK position and is connected to the talk circuits in the two other positions; the talk circuits are connected to the LINE when the FUNCTION switch is in the TALK and EXT EQPMT position. This permits use of the TALK circuits on both 4-wire and 2-wire circuits. When the switch is in the REC LEVEL control must be adjusted to provide a comfortable receive level.

3-16. The SEND section can be used independently from the rest of the equipment by inserting a plug into the 309 or 310 jack. Access to the send circuits can also be obtained on the T+R terminals provided on the front panel. Note however, that the T+R terminals will be connected to the line when the LINE switch is in the SEND position unless a dummy plug has been inserted in one of the two SEND jacks. The S terminal in the SEND section is connected to the sleeves of the SEND, LINE and EXT EQPMT jacks. The SEND HOLD switch controls an additional hold coil which is connected to the SEND circuits when they are used separately as described above.

3-17. The FUNCTION switch in its normal position, marked SND+REC+TALK, extends the control of the SEND, RECEIVE and TALK circuits to the LINE switch. In the CAL SEND position of the FUNCTION switch, it disconnects the send and receive circuits from the line circuits and interconnects them directly to permit calibration of the send level. (It should be noted that to calibrate the SEND signal, the REC LINE switch should

be in the CONN position, the IMP switch in the TRSM position and the REC IMP switch on the same impedance as the SEND IMP switch). In the REC-TALK position, the FUNCTION switch disables the oscillator circuit while leaving the other circuits under the control of the LINE switch.

3-18. LINE CIRCUITS. The set contains a talk circuit, hold coils and line switching circuits. A switch connected to the LINE jack selects SEND, REC, and TALK functions. Switches also provide the selection of hold and monitoring functions, self calibration, and the selection of externally connected equipment.

3-19. JACKS AND BINDING POSTS. The unit is equipped to accept both 309 and 310 type plugs in the SEND jacks and LINE jacks. The 310 LINE and REC jacks are arranged to accept a 241 type plug for 4-wire operation. With the exception of the 52A headset jack, all other jacks accept 310 type plugs. Binding posts give access in parallel to the tip, ring, and sleeve of the SEND jack and the REC DIR jacks. A GND binding post is provided for grounding a sleeve lead if desired.

3-20. POWER (Fig. FO-2, 3-7 and 3-8). The unit may be operated on 115 volts AC (50 to 400 Hz) or central office battery (-20 to -70 volts DC).

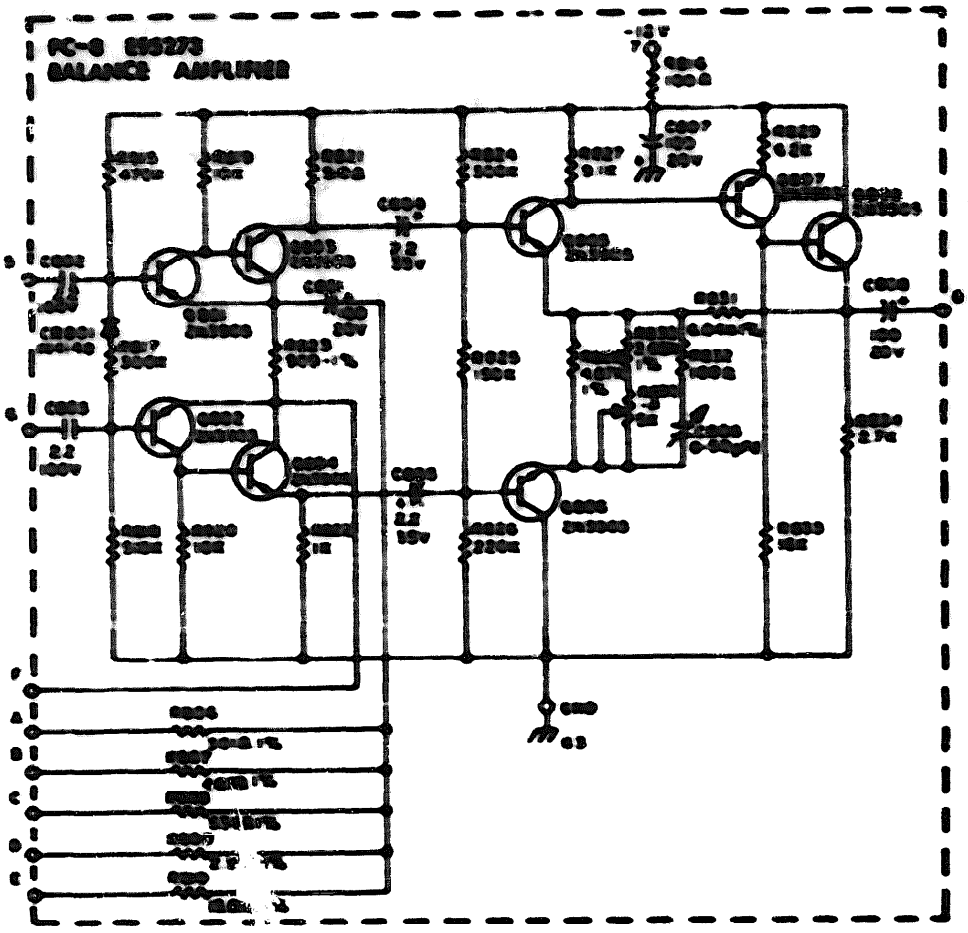

Figure 3-5. Balance Amplifier, PC8.

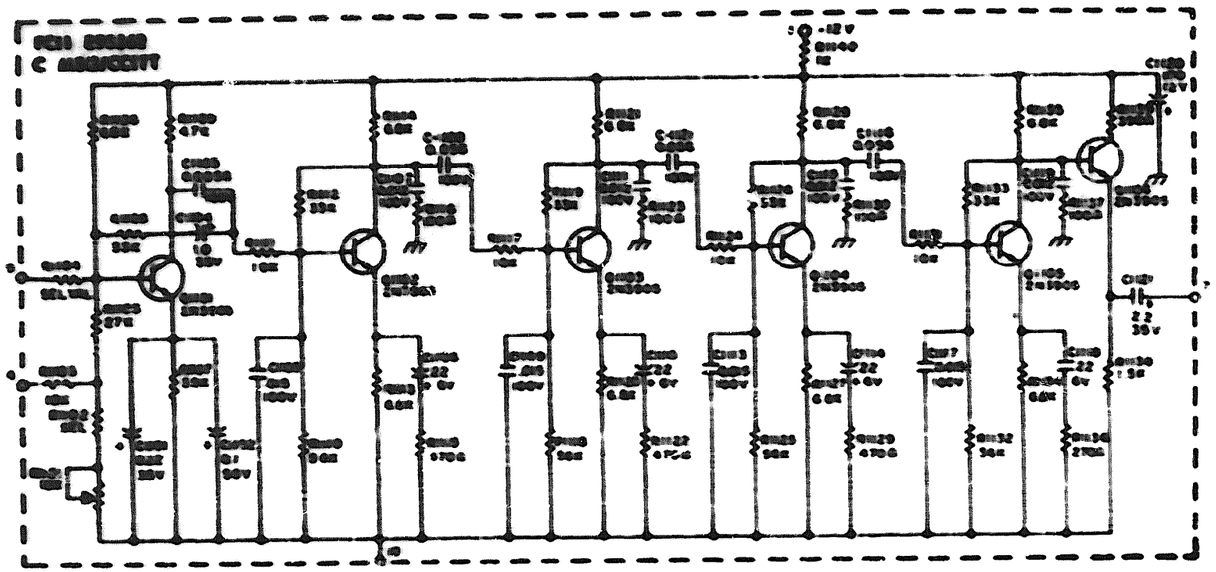

NOTE: UNLESS OTHERWISE STATED, ALL CAPACITOR VALUES ARE GIVEN IN MICROFARADS.

Figure 3-6. C MSG/CCITT, PCII.

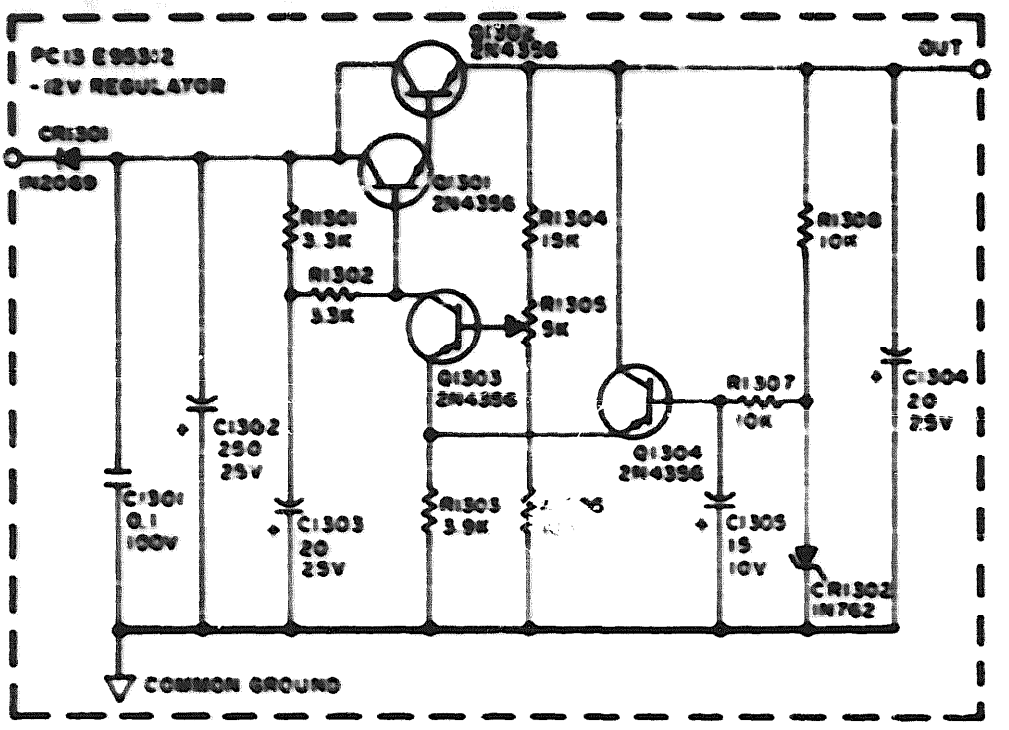

NOTE: UNLESS OTHERWISE STATED, ALL CAPACITOR VALUES ARE GIVEN IN MICROFARADS.

Figure 3-7. -12 Volt Regulator, PC13.

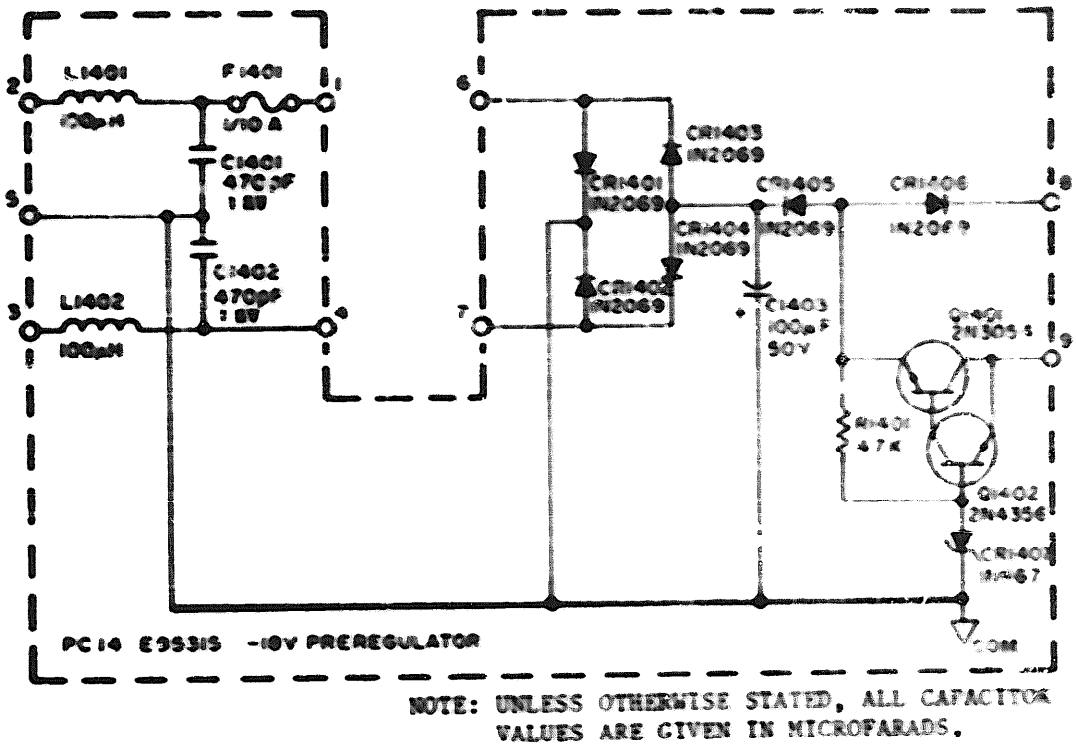

NOTE: UNLESS OTHERWISE STATED, ALL CAPACITOR VALUES ARE GIVEN IN MICROFARADS.

Figure 3-8. -18 Volt Regulator, PC14

SECTION IV

OPERATING INSTRUCTIONS

4-1. OPERATING CONTROLS AND INSTRUMENTS. Refer to table 4-1 and figure 7-1 for identification and location of controls, instruments, and connections for the test set.

4-2. POWER. Place the PWR switch in the ON position.

4-3. METER FUNCTION. Select the METER FUNCTION. To do this, turn the METER FUNCTION switch to the desired position. Unless otherwise specified in the test procedures, use the average (AVG) position. Make sure that the LEVEL VERNIER control is in the OUT position by turning it fully clockwise until a click is felt.

4-4. OPERATION. To operate the set, proceed as follows:

a. Receive Section.

(1). Make sure that the LEVEL VERNIER control is in the OUT position by turning it fully clockwise until it clicks.
(2). Set the METER FUNCTION switch in the average (AVG) position.
(3). Set the REC LEVEL switch in the 0 dBm (CAL) position.
(4). Turn the REC IMP switch to 600 ohms. Move the following switches to the positions indicated.
(5). REC LINE to connect (CONN).
(6). TRANSF to IN.
(7). NETWORK (left switch) to FLAT DBM.
(8). NETWORK (right switch) to C MSG position.
(9). IMP to TERM.

b. Line Section. Move the FUNCTION switch to CAL SEND position.

c. Send Section.

(1). Set the frequency selection controls to produce a 1000 Hz signal.
(2). Set the SEND LEVEL control to 0 dBm (CAL).
(3). Set the SEND IMP switch to 600 ohms.
(4). Now adjust the SEND LEVEL vernier to produce a 0 dBm reading on the meter and lock the control in this position.

d. Receive Section. If the receive section is to be used in a circuit with a different impedance than the send section, move the REC IMP switch to that position. The gain of the receive section is automatically changed by the proper amount when another receive impedance is selected; therefore, the receive section remains calibrated at any setting of the REC IMP switch.

e. Line Section. Return the FUNCTION switch to the SND+REC+TALK position; the set is now ready for use.

4-5. SPECIAL OPERATIONS.

a. If it is desired to calibrate the send level at a different send frequency than 1000 Hz, insert this frequency in step 4-4.c.(1).

b. If the send section is to operate at another impedance than 600 ohms, then change steps 4-4.a.(4) and 4-4.c.(3) from 600 ohms to the desired impedance in the calibration procedure.

c. To send any level which is not present on the SEND LEVEL switch, change steps 4-4.a.(3) and 4-4.c.(2) from "set the REC LEVEL switch to the 0 dBm (CAL) position" to "set the level switch to a position which is within -3 dB of the desired level" and change step 4-4.c.(4) to: "Produce the desired level reading" on the meter.

CAUTION

In this condition, the levels marked on the send level selector switch are incorrect and should not be used.

d. To measure deviations from a predetermined receive level, which is not available on the REC LEVEL switch, set the send section to this level as described above and then adjust the receive LEVEL VERNIER control until a 0 dB reading is observed.

CAUTION

This leaves both the send and the receive level in an "uncalibrated" condition: I.E., the markings on the level selector switches are now incorrect and should not be used.

NOTE

It may be necessary to turn the REC LEVEL control one step up or down.

4-6. CONNECTING THE SET TO THE CIRCUIT. It is assumed that the set has been set up for normal operation by following steps a through e of paragraph 4-4. To connect the set to the circuit under test, proceed as follows:

a. Normal operation.

(1). Two-wire Circuits.
Connect the circuit under test to the LINE jacks, using either a 309 or 310 equipped cord and connect a 52A or equivalent headset to the TALK and MON jacks. Dialing on the line circuits can be performed in one of two ways.

(a). If the line has been connected to the 310 line jack, an external dial may be inserted in series with the test set

by connecting it to the 309 line jack. Similarly, if the line is connected to a 309 jack, an external dial may be connected in the 310 jack.

(b). To use the dial circuit, the line is connected to the terminals or jack marked LINE and the jack marked TTS 4C-TEST SET (310) is connected by means of a patch cord to one of the LINE jacks of the TTS 4C. In this case, a short is applied across the circuit when the dial is in the "off normal" position. In addition, the switch should be in the DIAL+TEST SET (ON) position. When this switch is in the ON HOOK (OFF) position, it can connect a ringer. By means of the TALK-MON-LINE HOLD switch, the test set may be placed in an on hook or an off hook condition. In either condition, the SEND TALK and RECEIVE functions can be performed. The receive signal may be monitored by moving the TALK-MON-LINE-HOLD switch to the MON+4W TALK position; in this case the REC LEVEL switch should be turned to obtain a comfortable level in the receiver.

(2). Four-Wire Circuits.
Connect the 310 LINE jack which is marked 2W-S+R, 4W-S to the send side of the circuit under test and the REC jack which is marked 2W-R, 4W-R to the receive side; connect a 52A headset or equivalent to the TALK+MON jack. The LINE switch now permits selection of the SND, TALK and REC functions. The TALK+MON switch should be moved to the MON+4W TALK position. In this case, the headset receiver is connected to the monitor output of the RECEIVE section. Therefore the REC LEVEL control must be turned to obtain the desired level. In the REC position, a termination is connected to the SEND circuit. The setting of the SEND IMP switch determines the value of this termination which has a 2.0 mf capacitor in series with it.

b. <u>Special Operations</u>.

(1). To obtain a precision termination, insert a dummy plug in the REC jack and the circuit to be terminated in the LINE 310 (2W-S+R, 4W-S) jack and turn the SEND IMP switch to the desired impedance.

NOTE

Do not use on 75 ohms.

(2). To use the receive section separately and to disconnect it from all the wiring in the line section, move the REC LINE switch to the DISC position and connect to the REC DIR jack or the R+T terminals. Note that the S terminal is connected to the sleeve of the REC DIR jack. A transformer can be inserted in this application by using the TRANSF switch. In this application, no hold coil is provided.

(3). To use the SEND section separately, calibrate it in the manner described above and insert a 310 or 309 cord into the SEND jacks. This automatically disconnects the circuits from the LINE circuits and connects a separate hold coil to the SEND section under the control of the SEND HOLD switch. To use the T+R terminals, a dummy plug must be inserted in one of the SEND jacks.

(4). To measure transmission losses of any device which requires a dc closed loop at either or both sides, use the SEND section separately as described in step 3 above and connect the receive side of the device under test to the LINE jacks. In this application, move the LINE switch to the REC position and make sure that the REC LINE switch is in the CONN position. This method may be used to test cord circuits or the transmission through a complete central office.

(5). To use the Line section when the SEND and RECEIVE jacks are being used separately, no special provisions are required beyond connecting a 52A or equivalent headset to the TALK and MON jacks.

4-7. TERMINATION OF TESTS Move the PWR switch to the OFF position. If the set is to be moved to another location, remove all cords and the headset. When disconnecting the set, first remove the cord from the source of power and then remove it from the set.

CAUTION

4-8. NOISE TO GROUND MEASUREMENTS. The set contains circuits which provide measurements of noise to ground. To make these measurements disconnect the strap between binding posts GND (J22) and REF GND (J23); place the REC INPUT switch (S20) in the NOISE TO GROUND position; and connect the line (T+R) to the binding posts.

Table 4-1. Controls and Instruments

CONTROL, INDICATOR, OR FUSE	FUNCTION
VARIABLE FREQ variable capacitor (C1)	Tunes selected frequency range.
FREQ RANGE rotary switch (S1)	Sets frequency range multiplier.
FIXED FREQ HZ rotary switch (S3)	Sets fixed frequency.
SEND LEVEL rotary switch (S4)	Selects sensitivity levels in send mode.
SEND LEVEL variable resistor (R1)	Fine level adjustment for send level.
SEND IMP rotary switch (S5)	Selects send impedance.
FREQ toggle switch (S2)	Selects variable or fixed frequency operation.
SEND HOLD toggle switch (S6)	Send hold coil ON or OFF.
TALK, MON LINE HOLD level switch (S7)	Controls talk and hold circuits.
FUNCTION lever switch (S8)	Connects and disconnects send and receive circuits from line circuits.
LINE lever switch (S9)	Selects send, receive and talk and ext, or receive functions.
METER FUNCTION rotary switch (S18/19)	Switches detector circuit to provide Peak, Average, or RSS readings.
LEVEL VERNIER (P/O S18/19)	Permits receive levels to be read to 0 dBm position.
REC LEVEL rotary switch (S16)	Selects sensitivity levels of input.
REC IMP rotary switch (S14)	Selects receive impedance.
REC LINE toggle switch (S10)	Connects/disconnects receiver section from line and send circuits.
TRANF toggle switch (S11)	Switches balanced input transformer in or out.
NETWORK (WTG DBRN) toggle switch (S12)	Selects flat response or weighting response.
NETWORK (C-MSG) toggle switch (S13)	Selects C message network or CCITT weighting network.
PWR toggle switch (S17)	Connects/disconnects ac power.

Table 4-1. Controls and Instruments (continued)

CONTROL, INDICATOR, OR FUSE	FUNCTION
PWR indicator lamp (DS1)	Lights to indicate power is on.
1/10 A fuse (F2)	Protects equipment from overload conditions.
Telephone dial (S21)	Internal dial circuit.
REC INPUT lever switch (S20)	Selects receive input from front panel, rear terminal board or noise-to-ground binding posts.
CALL indicator lamp (DS2)	Detects ringing.
LEVEL Meter (M1)	Multi-scale meter: measures transmission, noise and voltage measurements depending on control settings.
IMP toggle switch (S15)	Sets receive impedance to BRDG of TERM.
SEND BINDING POSTS:	
J1 T (RED)	Send "T" binding post.
J2 R (BLACK)	Send "R" binding post.
J3 S (BLACK)	Send "S" binding post.
RECEIVE BINDING POSTS:	
J17 T (RED)	Receive "T" binding post.
J16 R (BLACK)	Receive "R" binding post.
J15 S (BLACK)	Receive "S" binding post.
J12 GND (METAL)	Receive "GND" binding post.
J22 GND	Noise to Ground T + R binding post.
J23 REF GND	Noise to Ground T + R binding post.

Table 4-1. Controls and Instruments (continued)

CONTROL, INDICATOR, OR FUSE		FUNCTION
TELEPHONE JACKS:		
J4	REC 2W-R 4W-R	310 Receive Jack.
J5	LINE 2W-S+R 4W-S	310 Line Jack.
J6	LINE 2W-S+R	309 Line Jack.
J7	TALK & MON	52A Headset Jack.
J8	TALK & MON	52A Headset Jack.
J9	SEND	310 Send Jack.
J10	SEND	309 Send Jack.
J11	EXT EQPMT	310 Line Jack.
J13	REC DIR	310 Receive Jack.
J14	EXT FIL	310 Receive Jack.
J20	INT DIAL	310 To insert internal dial.
J21	EXT DIAL	310 To insert external dial.

SECTION IV-1

PREVENTIVE MAINTENANCE CHECKS AND SERVICES

4-1.1. GENERAL

Preventive maintenance is the systematic care, inspection, and servicing of equipment to maintain it in serviceable condition, prevent breakdown, and insure maximum operational capability. Preventive maintenance includes cleaning, lubrication, and inspection of the equipment on a regularly scheduled basis.

4-1.2. PREVENTIVE CHECKS AND SERVICES.

Preventive checks and services are listed in table 4-1.1. The "Interval" column indicates the minimum inspection requirements. Defects discovered should be noted so corrective action can be accomplished as soon as possible. Records and reports of the preventive maintenance checks and services must be made in accordance with the requirements of TM 38-750.

4-1.3. CLEANING

a. Exterior Surfaces. Inspect the exterior surfaces of the TS-3483/U. The surfaces should be clean, free of dust, grease, and fungus.

(1) Remove dust and loose dirt with a clean, soft cloth.

WARNING

The fumes of TRICHLOROETHANE are toxic. Provide thorough ventilation whenever it is used; avoid prolonged or repeated breathing of vapor. Do not use near an open flame or hot surface; trichloroethane is nonflammable but heat converts the [illegible] highly toxic phosgene gas the inhalation of which could result in serious injury or death. Prolonged or repeated skin contact with trichloroethane can cause skin inflammation. When necessary, use gloves, sleeves and aprons which the solvent cannot penetrate.

(2) Remove grease, fungus, and ground-in dirt from the case; use a cloth dampened (not wet) with trichloroethane (NSN 6810-00-292-9625). Wipe dry with a clean dry cloth.

(3) Clean the front panels and control knobs, use a soft, clean cloth. If dirt is difficult to remove, dampen the cloth with water; use mild soap if necessary.

WARNING

Hazardous potentials are present in the test set interior. DO NOT attempt to clean the interior if the power is on.

b. Interior Surfaces. Dust and dirt will accumulate on the various subassemblies over a period of time. Use a clean, lint-free cloth to clean interior surfaces or subassemblies. If necessary, moisten cloth with trichloroethane to clean smudges or stubbornly dirty areas. Wipe dry with a clean dry cloth.

c. Lubrication. The TS-3463/U does not require lubrication.

Table 4-1.1. Preventive Maintenance Checks and Services

B-Before D-During A-After W-Weekly M-Monthly

Item No.	Interval B	D	A	W	M	Item to be Inspected	Procedure Check for and have repaired or adjusted as necessary	For readiness reporting, equipment is not ready/available if:
1				x		Exterior surfaces	Clean exterior surfaces as required (para 4-1.3g).	
2	x					Power cord	Check for cuts or fraying.	
3				x		Control knobs and switches	Check for cracks, corrosion, dirt, and ease of operation.	
4	x					Fuse	Check for blown fuse (J1, fig.1-1)	
5				x		Binding posts and jacks.	Check for dirt or corrosion.	
6		x				Lamps	See that lamps illuminate when specified.	
7					x	Test set interior	WARNING Do not attempt to clean test set interior with power applied to equipment. Check for damaged or loose wiring, poor connections, and evidence of component damage. Clean if necessary (para 4-4.3).	
8					x	Publications	Check to see that all publications are complete and current. Refer DA PAM 310-4.	

SECTION V

MAINTENANCE INSTRUCTIONS

5-1. GENERAL. The TS-3483/U requires minimum maintenance to keep in operating condition. Extensive field experience with the equipment has shown that maintenance beyond normal calibration is not encountered. However, sufficient data is included in this section to provide guidance to the skilled repair technician who may elect to perform circuit repair rather that return the set to Northeast factory repair facilities.

NOTE

The portable version of this instrument has been calibrated with the meter in the horizontal position and the rack-mounted version with the meter in the vertical position. To obtain the specified accuracy, the instrument must be operated in the same position in which it was calibrated. If it is desired to operate the instrument in another position, the instrument must be recalibrated while the meter is in the desired position.

5-2. CLEANING AND LUBRICATION There are no special cleaning procedures to be followed. The set requires no lubrication.

5-3. TROUBLESHOOTING.

a. General. Before attempting repair of the test set make sure that the calibration procedures (para. 5-4 through 5-6) have first been tried to correct the problem. After this, the first step in servicing a defective test set is to sectionalize the fault. Sectionalization means tracing the fault to a major circuit group of the test set, such as the power supply circuit cards. The second step is to localize the fault. Localization means tracing the fault to a defective stage of the circuit group responsible for the abnormal condition. The third step is isolation. Isolation means locating the defective component or part in the circuit stage. Some defective parts, such as burned resistors and arcing or shorted transformers, can often be located by sight, by smell, and hearing; however, most defective parts must be isolated by checking voltages and resistances.

(1). Sectionalization. The test set circuits are divided into three basic groups; send section, receive section, and power supply. The first step in tracing trouble is to determine the circuit group fault as follows:

(a). Operation tests. An operational test frequently indicates the general location of trouble. In many instances, the test will help to determine the exact nature of the fault. The operating procedures (Section IV), with the normally expected indications called out in the procedures, provide good operational tests.

(b). Visual inspection. The purpose of visual inspection is to locate faults without testing or measuring circuits. All meter readings, or other visual indications, should be observed and an attempt made to sectionalize the fault to a particular circuit group.

(2). Localization. Localization procedures should be performed after the trouble has been sectionalized. The troubleshooting chart (Table 5-1) should be used in localizing the trouble to a suspected stage. The troubleshooting chart lists symptoms of common troubles and give (or reference) corrective measures. Such a chart cannot include all the trouble symptoms that occur; the repairman should use the chart as a guide in analyzing symptoms that may no be listed.

CAUTION

Before using any ohmmeter to test transistors or transistor circuits, check the open circuit voltage across the ohmmeter test leads. Do not use the ohmmeter if the open circuit voltage exceeds 1.5 volt. Also, since the RX1 range normally connects the ohmmeter internal battery directly across the test leads, the comparatively high current (50 milliampere (ma) or more) may damage the transistor under test. As a general rule, the RX1 range of any ohmmeter should not be used when testing transistors other than those in the power supply.

(3). Isolation. After the fault has been localized to a stage by using the troubleshooting chart, voltage and resistance measurements and waveform checks should be made to isolate the defective component. A deviation of any appreciable amount from the voltage and resistence readings will indicate a faulty part. The voltage checks will isolate the trouble to a group of parts, such as resistors, capacitors, and diodes; a resistance check will determine which part or component is defective.

(4). Component locations. Figures 7-1 through 7-24 show component and parts location and identification for the test set.

(5). Circuit schematics. Figures FO-1 through FO-2 are circuit diagrams to assist in the troubleshooting and repair of the test set. Also refer to section III and figures 3-1 through 3-8 for details on test set circuitry.

5-4. RECEIVE SECTION SENSITIVITY CALIBRATION. When operation of the test set indicates that a readjustment of the receive section sensitivity is required proceed as follows:

CAUTION

Make sure that the equipment used in calibrating the test set is working properly before deciding that any recalibration should be performed.

a. Place the following controls in the positions as listed:

Control	Position
REC IMP	600
IMP	TERM
REC LINE	DISC
TRANSF	OUT
NETWORK	FLAT DBM
	C MSG
REC LEVEL	0dB (CAL)

b. Place the PWR switch in the ON position.

c. Place the FUNCTION switch to the RSS position and connect a 1 kHz, 0dB (600 ohm source) signal to the jack or the T and R binding posts.

CAUTION

The LEVEL VERNIER control must be in the detented (OUT) position, i.e., in the fully clockwise position.

NOTE

0dB should be calibrated from an accurate source.

Adjust potentiometer R1021 for ±0.02 dB reading.

d. Place the FUNCTION switch to the AVG position and adjust potentiometer R1030 for +0.02 dB meter reading.

e. Place the FUNCTION switch to the PK position and adjust potentiometer R1015 for +0.02 dB meter reading.

NOTE

The above steps will allow recalibration for errors of approximately ±0.50 dB. Any error exceeding this would indicate a malfunction in the set.

f. Put a dab of quick setting liquid adhesive on the shafts of R1015, R1021, and R1030 to secure them in position.

g. Place the PWR switch in the OFF position.

NOTE

Calibration at a +0.02 dB reading for a 0.00 dBm input signal is recommended because it splits the error resulting from the approximately 0.05 dB insertion loss of the transformer. If the set is primarily used with the transformer in, then calibration in this condition may be the preferred calibration method.

5-5. RECEIVE SECTION CALIBRATION PROCEDURES. The test set has been carefully calibrated and tested before shipment and should not need recalibration except in case of age or misuse. If recalibration is required, proceed as follows:

a. Test Equipment. Obtain test equipment shown in table 5-2 or the equivalent makes and models.

b. Summary of calibration points Table 5-3 summarizes the points of calibration of the test set.

c. Calibration Procedures.

(1). Set the front panel controls on the test set as follows:

Control	Setting
PWR switch	ON
METER FUNCTION switch	RSS
VERNIER out	DETENT position
REC LEVEL switch	-20 dBm
R. IMP switch	600 ohms
IMP switch	BRDG
NETWORK switch	FLAT DBM
TRANF switch	OUT
REC LINE switch	DISC

(2). LOW FREQUENCY (1 KHZ).

(3). 30 dB ATTENUATION and FREQ adj. Monitor the output (pin 8) of the line amplifier (PC8) with an AC voltmeter and adjust the input level at 1 kHz (600 ohms) for an output level of the line amplifier of -10 dBm. Switch the REC LEVEL switch (S-16) to the -10 dBm position. The output of the line amplifier should drop to a level of approximately -40 dBm. Adjust potentiometer R701 on the 30 dB attenuator board (PC7) for a drop of 30 dBm. Still monitoring the output of the line amplifier with an AC voltmeter, reverse the polarity of the input signal to the set witho changing any other controls. Adjust potentiometer R703 on the 30 dB Attenuator board until no change in the level is appreciably noticed with a reversal of the input signals polarity. Interaction between these two adjustments does occur and a readjustment of both may be required.

(4). 20-30 dB AMPLIFIER. Monitor the output (pin 6) of the 20-30 dB AMPLIFIER (PC12) with an AC voltmeter. Set the VERNIER OUT in the detented position and adjust the input signal for -50 dBm. Set the AC voltmeter for -30 dB range and adjust the input signal for a zero (0) level on the AC voltmeter. Switch the AC voltmeter to -20 dBm range and the REC LEVEL to -60 dB. Adjust potentiometer R1201 on the 20-30 dB AMPLIFIER (PC12) for a -20 dBm reading on the AC voltmeter.

5). Q-RMS DETECTOR. Set the front panel controls as follows, leaving all other controls in their initial settings.

Control	Setting
REC LEVEL switch	0 dBm
IMP switch	Term

Monitor the input level to the test set using the AC voltmeter and adjust the oscillator for a 0 dBm reading at 1 kHz. Adjust potentiometers R1015, R1021 and R1030, located on the Q-RMS board (PC8) for an approximate 0 dBm reading on the meter. Switch the METER FUNCITON switch (S18) to the PK position and adjust R1015 for a 0 dBm reading on the meter. Switching the METER FUNCTION switch should keep a constant reading of 0 dbm on the output meter with an input of 0 dBm to the test set.

(6). REC LEVEL Switch (S16). Tracking at 1 kHz of the REC LEVEL switch should be ±0.15 dB from +20 dBm to -55 dBm setting, and ±0.2 dB for the -60 dBm setting. Some adjustment of R701 located on the 30 dB ATTENUATOR board (PC7) may be required for this degree of accuracy.

(7). HIGH FREQUENCY (100 kHz to 1 MHz). Set the front panel controls as follows:

Control	Setting
PWR switch	ON
METER FUNCTICN switch	RSS
VERNIER OUT	OUT position
REC LEVEL switch	-20 dBm
REC IMP switch	75 ohms
IMP switch	TERM
NETWORK switch	FLAT dBm
TRANSF switch	OUT
REC LINE switch	DISC

(8). LINE AMPLIFIER. Monitoring the output of the line amplifier, pin 8, with an AC voltmeter and using 1 kHz (75 ohms) as a reference, the oscillator for 100 kHz (75 ohms) at -20 dBm and increase to 1 MHz while noting for any peaking of the output signal of the balanced amplifier. Adjust trimmer capacitor C806, located on the line amplifier board (PC8) so that there is a rising response curve at 1 MHz. Readjust the output level of the oscillator for a 0 dB meter reading at 1 kHz and adjust C1010 located on the Q-RMS detector board (PC10) for a 0db indication on the meter.

(9). 30 dB ATTENUATOR. Set the REC LEVEL switch switch (S16) in the -10 dBm position and after setting the level of the oscillator for 0dB meter reading at kHz (75 ohms) increase the oscillator frequency to 1 MHz and adjust C701 located on the 30 dB attenuator board (PC7) for a 0 dB meter reading.

(10). BALANCE. Set the REC LEVEL switch (S16) to the -10 dB position and set the oscillator at 100 kHz for a 0 dB meter reading. Reverse the polarity of the input and adjust the trimmer capacitor C702 located on the 30 dB attenuator board so that no appreciable level change is noted with repeated reversal of the input signal polarity.

(11). If any different input levels are wished to be used, refer to the receive section level diagram in section 3 of the manual for the appropriate intermediate signal levels or for tracing an input signal through the circuitry.

5-6. SEND SECTION CALIBRATION

a. Set the front panel controls of the test set as follows:

Control	Setting
PWR switch	ON
FREQ RANGE switch	X10 FIXED + VAR
FREQ	FIXED
FIXED FREQ Hz	100
SEND LEVEL	0 (CAL)
SEND IMP	600

b. Oscillator Board. Monitor the output (pin 6) of the OUTPUT AMPLIFIER (PC4) with a Distortion Analyzer and a High Frequency Oscilloscope. Observe the output waveform and output level, if no signal exists, slowly adjust potentiometer R102 on the oscillator board (PC1) clockwise until a sine wave free of visual distortion is observed. Monitor the output (pin 4) of the oscillator board (PC1) with an AC voltmeter and adjust potentiometer R106 on the oscillator board for an output level of .5 VRMS. The distortion of the output of the output amplifier (pin 6) should be less than .5%. Readjustment of these two potentiometers will reduce the distortion.

c. Refer to paragraph 5-3 if the above calibration procedure fails to correct the problem.

5-7. GENERAL PARTS REPLACEMENT TECHNIQUES. When the dust cover of the test set is removed, all components of the test set are easily accessible for repair and replacement. Figure 7-2 shows the location of the circuit cards; the other illustrations in section 7 provide a complete breakdown of the component parts. Precautions given below apply to general parts replacement.

a. Remove and install components that are soldered with a pencil-type soldering iron with a 25-watt maximum capacity. The test set is transistorized; if the soldering iron must be used with ac voltage, use an isolating transformer between the soldering iron and the line. Do not use a soldering gun; damaging voltages can be induced in the circuit components.

b. Before a part is unsoldered, note the position of the leads. If a part, such as a transformer or switch, has a number of connections, tag each of the leads to make proper connections when replacing the part. Be careful not to damage other leads by pulling or pushing them out of the way.

Table 5-2. Test Equipment

Description	Mnfg. - Model (Mil. Nomenclature)
1. AC Voltmeter	HP 400 FL or Equal (ME-30E/U)
2. Signal Generator - 100 hz to 1 MHz capability normally 6 ohm output (75 and 600 ohm output impedance).	HP 652A or Equal (AN/USM-205)
3. High Frequency Oscilloscope.	Tektronix 535 or Equal (AN/USM-281C)
4. Attenuation Network.	Daven Type VT 795G or Equal (CN-1000/C)
5. Multimeter.	Triplett Model 1630NA or Equal (AN/USM-223)
6. Distortion Analyzer.	HP 333A or Equal (AN/USM-184A)

Table 5-3. Calibration Points

Location	Ref. Design.	Purpose
Board PC8	R830A	Adjust for approximately 10db of gain of the LINE Amplifier.
	C806	Adjust for an optimum frequency response for the LINE Amplifier at 1 MHz.
Board PC7 40db Attenuation and freq. adjust.	R701	Adjust for 30db attenuation at 1 kHz.
	R703	Adjust for input balance at 1 kHz.
	C701	Adjust for high frequency, 30db attenuation.
	C702	Adjust for input balance at 100 kHz.
Board PC12 20-30db amp.	R1201	Adjust for approximately 20db of gain of the 20-30db amplifier.
Board PC10 Q-RMS Detector	R1015	With an input of 0dbm at 1 kHz adjust for a 0dBm meter output (M-1) with the METER FUNCTION switch (S-18) in PK position.
	R1021	With an input of 0dBm at 1 kHz adjust for 0dBm meter output (M-1) with the METER FUNCTION switch (S-18) in RSS position.
	R1030	With an input of 0db at 1 kHz, adjust for a 0dBm meter output (M-1) with the METER FUNCTION switch (S-18) in AVG position.
	C1010	Adjust for a 0dBm 0 meter output (M-1) with an output of 0dBm at 1 MHz with the METER FUNCTION switch (S-18) in the RSS position.

SECTION VI

PREPARATION FOR RESHIPMENT AND STORAGE

6-1. DISASSEMBLY OF EQUIPMENT To prepare the test set for shipment or limited storage, proceed as follows.

a. Disconnect the power cord from the source of power and then remove it from the set.

CAUTION

Do not change the sequence of disconnecting the dc power cord.

b. Remove the four mounting screws holding the test set in the mounting rack.
c. Carefully remove the test set from its position in the mounting rack.

6-2. REPACKAGING FOR SHIPMENT OR LIMITED STORAGE.

a. Material Requirements. The oringinal packaging material in which the test set was shipped from the factory should be used if available. If not, the following materials should be obtained.

Material	Quantity
Cardboard carton (22 in X 14 in X 15-3/4 in)	1 ea.
Waterproof paper tape	10 ft.
Wrapping paperboard	12 sq. ft.
Waterproof paper	20 sq. ft.
Filler material	10 sq. ft.
Corrugated cardboard	10 sq. ft.

b. Packaging.

(1). Wrap the test set and power cord with wrapping paperboard, and secure with waterproof tape.
(2). Wrap the instruction manual in waterproof paper, and seal with waterproof tape.
(3). Line the inside of the cardboard carton with waterproof paper.
(4). Place the test set, power cord, and manual in the cardboard carton so that there will be adequate clearance on all sides of the package.
(5). Stuff the filler material in the spaces around the packages.
(6). Seal the cardboard carton with waterproof tape.

c. Packing. Obtain or construct a wooden box large enough to allow a 1-inch clearance on all sides. Line the inside of the wooden box with waterproof paper and corrugated cardboard. Place the cardboard carton inside the box, and nail the wooden box cover.

SECTION VII

PARTS LIST

7-1. ARRANGEMENT. This section includes parts list tabulations and illustrations which identify maintenance parts of the test set. Both the listings and illustrations are arranged in groupings by major assemblies and assemblies. Relationship between the tabulations is maintained by notational references to next higher or lower assemblies thus providing continuity of the listings and illustrations.

7-2. REFERENCE DESIGNATIONS. The tabulation for each assembly is arranged in reference designation order. The reference designations are included on the illustrations to identify the physical location of parts and assemblies.

7-3. FEDERAL SAFETY CODE OF MANUFACTURERS (FSCM). The following codes are used in parts lists to identify the manufacturer of maintenance parts.

CODE NUMBER	MANUFACTURER
01121	Allen-Bradly, Milwaukee, Wis. 53204
01295	Texas Instruments, Dallas, Texas 75231
03797	Eldema Div. Genisco Technology Corp., Compton, Calif. 90221
03888	Pryofilm Resistors Co. Inc., Cedar Knoll, N.J. 07927
05864	Collins Industries Inc., Greenfield, Tenn. 38230
06819	Northeast Electronics Corp., Concord, N.H. 03301
07716	IRC Division of TRW Inc., New Castle DEL. 19720
09353	C + K Components Inc., Newton, Mass. 02158
12065	Transistron Electronics Corp., E. Boston, Mass. 02128
13606	Sprague Electric Co. Transistor Div., Concord, N.H. 03301
14100	Stromberg - Carlson, Rochester, N.Y.
15801	Fenwall Electronics Inc., Framington, Mass. 01701
15873	Motorola Inc., Arcade, N.J. 14009
17803	Fairchild Semiconductor Div., Mountain View, Calif. 94041
19701	Electra/Midland Corp., Mineral Wells, Texas 76067
22650	Whale Electronics Inc., Nashville, Tenn. 37204
27735	F-Dyne Electronic Co., Fairfield, Conn. 06430
27817	W.A. Miller Co., Oquossoc, Maine 04964
30646	Helipot Div. of Bechman Inst. Inc., Cedar Grove, N.J.
31433	Kemet/Union Carbide, Greenville, S.C.
49671	RCA Corp., N.Y., N.Y. 10020
71450	CTS, Elkhart, Ind. 46514

7-3. FEDERAL SUPPLY CODE OF MANUFACTURERS (Cont.)

CODE NUMBER	MANUFACTURER
71590	Centralab, Milwaukee, Wis. 53201
72982	Erie Technological Projects Inc., Erie, PA 16512
75915	Littelfuse Inc., Des Plaines, Ill. 75915
76854	Oak MFG. Co. Div. of OAK Electro/Netics Corp., Crystal Lake, Ill. 60014
80223	United Transformer Co., N.Y., N.Y. 10013
80272	CECO Corporation The, Chicago, Ill. 20650
80486	All Star, Defiance, Ohio
81073	Grayhill Inc., La Grange, Ill. 60525
82389	Switchcraft, Chicago, Ill.
83330	Smith Herman H., Inc., Brooklyn, N.Y. 11207
84171	ARCO Electronics Inc., Great Neck, N.Y. 11022
90768	IE Industries Inc., Minster, Ohio 45865
94322	Tel + Labs, Inc., Manchester, N.H. 69153
95069	Beede Mfg. Co., Woodside, L.I. N.Y.
HELTR	Heltronics Corp., Newark, N.J.
RUMBR	Rumbrant, Inc., Boston, Mass.
STANC	Stancor, Newark, N.J. 07114

7-4. ABBREVIATIONS

NHA - Next higher assembly.

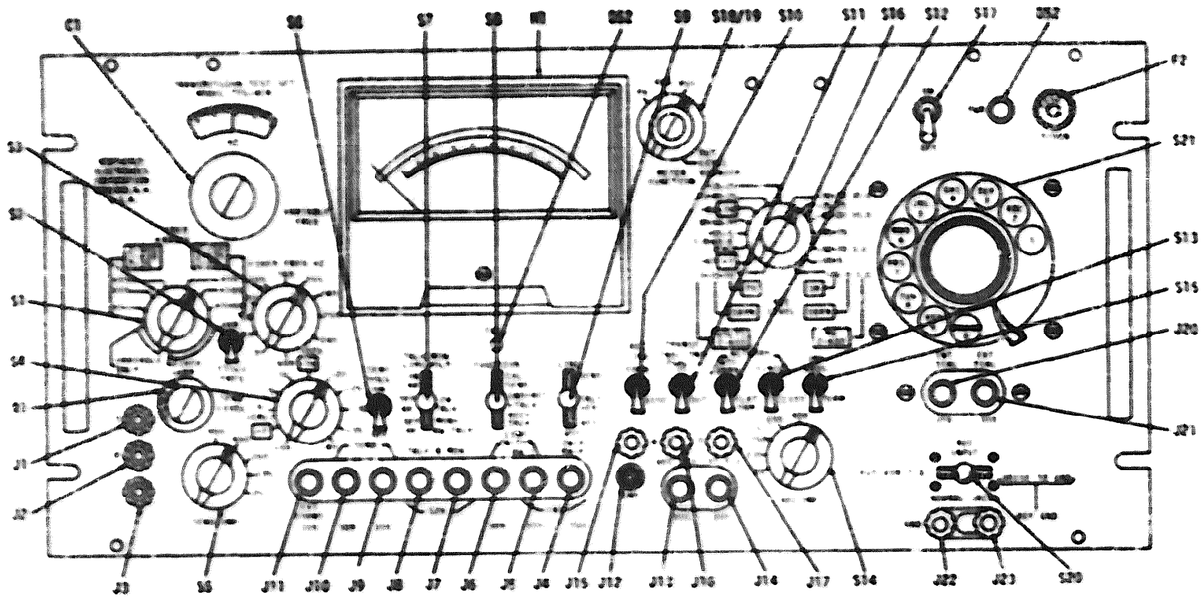

Figure 7-1. Front Panel - Parts Location.

7-5. PARTS LIST - FRONT PANEL (FIGURE 7-1)

Ref Des	Part Number	FSCM	Description	Qty Ass
C1	340445201	80486	VARIABLE CAPACITOR	
DS1	930	58854	LAMP,INDICATOR (POWER)	
DS2	BG20CC-NEZE	03797	LAMP,INDICATOR (CALL) NEON	
F2	3AG	75915	FUSE (LINE POWER)	
J1	29-1R	81073	BINDING POST,RED	
J2	29-1B	81073	BINDING POST,BLACK	
J3	29-1B	81073	BINDING POST,BLACK	RE
J4	SJ-1192	82389	JACK (REC)	
J5	SJ-1490A	82389	JACK (LINE)	
J9	SJ-1490A	82389	JACK (SEND)	RE
J6	SJ-1492	82389	JACK (LINE)	
J10	SJ-1492	82389	JACK (SEND)	RE
J11	SJ-1492	82389	JACK (LINE)	RE
J7	SJ-1194	82389	JACK, (HEADSET)	
J8	SJ-1194	82389	JACK, (HEADSET)	RE
J12	137-SP	83330	POST,BINDING ("GND")	
J13	SJ-1329	82389	JACK (REC)	
J14	SJ-1192	82389	JACK, (REC)	
J15	5595-175-0	06819	POST,BINDING ("S" BLACK)	
J16	5595-175-0	06819	POST,BINDING ("R" BLACK)	RE
J17	5595-175-2	06819	POST,BINDING ("T" RED)	
J20	55-1191	82389	JACK (INT DIAL)	
J21	55-1191	82389	JACK (EXT DIAL)	
J22	5595-175-0	19909	POST,BINDING (GROUND)	
J23	5595-175-0	19909	POST,BINDING (REF GROUND)	
M1	6547-00	95069	METER MULTI-SCALE	
R1	CD1415WA45	71450	RESISTOR,VARIABLE	
S1	B000430033	06819	SWITCH,SEE FIGURE 7-18	
S2	7201P	09353	SWITCH,DPDT,5A,28V	
S3	B000430034	06819	SWITCH ASSY,SEE FIGURE 7-19	
S4	B000430035	06819	SWITCH ASSY,SEE FIGURE 7-20	
S5	B000430036	06819	SWITCH ASSY,SEE FIGURE 7-21	
S6	7201P	09353	SWITCH DPDT,5A,28V	
S7	173N	14100	SWITCH,LEVER	
S8	173P	14100	SWITCH,LEVER	
S9	173P	14100	SWITCH,LEVER	RE
S10	6204-01900	09353	SWITCH,TOGGLE	
S11	6204-01600	09353	SWITCH,TOGGLE	
S12	7301	09353	SWITCH,TOGGLE	
S13	6204-00100	09353	SWITCH,TOGGLE	
S14	625300800	06819	SWITCH ASSY,SEE FIGURE 7-22	
S15	6204-00600	09353	SWITCH,TOGGLE	
S16	B000430038	06819	SWITCH ASSY,SEE FIGURE 7-23	
S17	7203P	09353	SWITCH,DPDT 5A	
S18/19	B000430039	06819	SWITCH,ROTARY-SEE FIGURE 7-24	
S20	173P	14100	SWITCH,LEVER	
S21	ST12A	31356	DIAL,TELEPHONE (INT)	

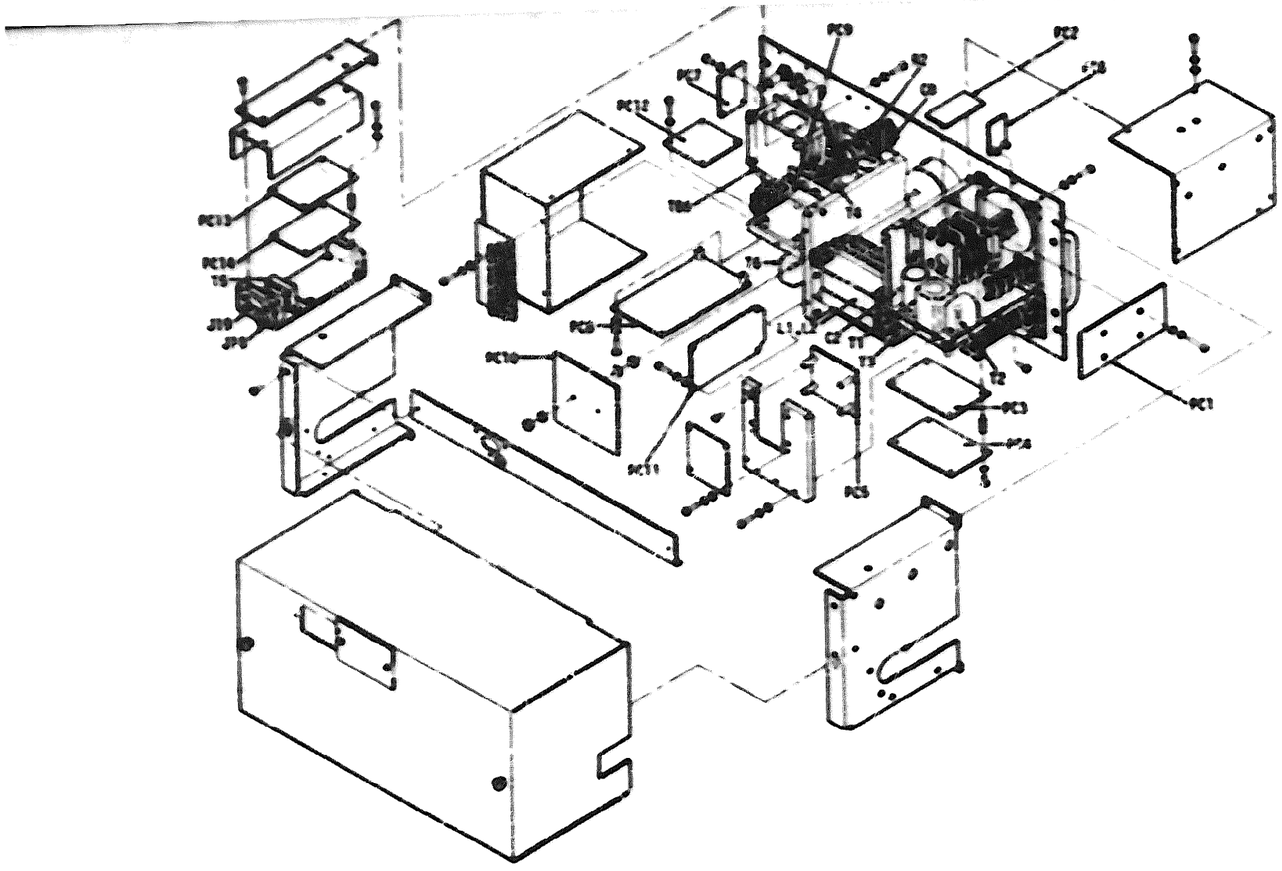

Figure 7-2. Main Chassis - Parts Location

PARTS LIST - MAIN CHASSIS (FIGURE 7-2)

Ref Des	Part Number	FSCM	Description	Qty Ass
C2	D47141	13606	CAPACITOR 100uf, 150V	1
C3	2TW-550	13606	CAPACITOR .05uf, 200V	1
C4	D-2.0-200-10	27735	CAPACITOR 2uf, 150V	1
C5	TVA-1304	13606	CAPACITOR 10uf, 50V	1
C8	D-27355	13606	CAPACITOR 50uf, 75V	1
FT1-4	260-0304-001	13606	TERMINAL,FEED-THRU	4
J18	L112B	STAMC	JACK,BATTERY,CO	1
J19	AC36	82389	RECEPTACLE,AC	1
L1	TN-1274	06819	COIL,MOLD	2
L2	TN-1274	06819	COIL,MOLD	REF
PC1	E95319	06819	OSCILLATOR BOARD,SEE FIGURE 7-3	1
PC2	E95335	06819	FREQUENCY PADDING BOARD,SEE FIGURE 7-4	1
PC3	E95326	06819	IMPEDANCE BOARD,SEE FIGURE 7-5	1
PC4	E95327	06819	OUTPUT AMPLIFIER BOARD,SEE FIGURE 7-	1
PC5	E95351	06819	BRIDGE FIXED CAP. BOARD,SEE FIGURE 7-	1
PC6	E96350	06819	RESISTOR PADDING BOARD,SEE FIGURE 7-8	1
PC7	E95360	06819	30 dB ATTENUATOR AND FREQUENCY ADJUST BOARD,SEE FIGURE 7-9	1
PC8	E95273	06819	BALANCE AMPLIFIER BOARD,SEE FIGURE 7-10	1
PC9	E95353	06819	INTER ATTEN BOARD,SEE FIGURE 7-11	1
PC10	E95357	06819	Q-RMS DETECTOR,SEE FIGURE 7-12	1
PC11	E95362	06819	C MTG/CCITT,SEE FIGURE 7-13	1
PC12	E95275	06819	INTER AMPLIFIER,SEE FIGURE 7-14	1
PC13	E95312	06819	-12V REGULATOR BOARD,SEE FIGURE 7-15	1
PC14	E95315	06819	-18V REGULATOR BOARD,SEE FIGURE 7-16	1
TB1	A000430065	06819	TERMINAL BOARD (NOT SHOWN)	1
TB2	A000430066	06819	TERMINAL BOARD (NOT SHOWN)	1
TB3	A000430067	06819	TERMINAL BOARD (NOT SHOWN)	1
TB4	A000430121	06819	TERMINAL BOARD (NOT SHOWN)	1
TB5	8500-00600	06819	TERMINAL BOARD (NOT SHOWN)	1
TB6	E95626	06819	NOISE TO GROUND TERMINAL,SEE FIGURE 7-17	1
R3	RC20GF203J	27735	RESISTOR 20K	1
R4	242E5015	13606	RESISTOR 500 OHMS	1
T1	A-20	80223	TRANSFORMER	1
T2	4008-01-0808	06819	TRANSFORMER	1
T3	CE-104A	80272	TALK COIL	1
T4	A-20	80223	TRANSFORMER	1
T5	P8349	27817	TRANSFORMER	1
T6	4009-01-0808	06819	TRANSFORMER	1
TP1-2	260-0003-001	13606	TERMINAL,STANDOFF	2

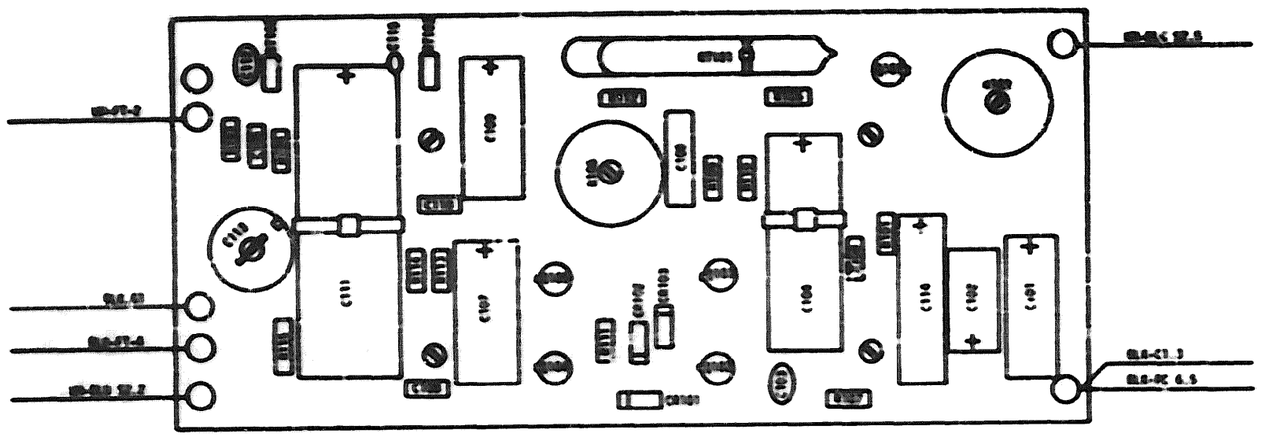

Figure 7-3. Oscillator Board, PCI - Parts Location

PARTS LIST - OSCILLATOR BOARD (FIGURE 7-3)

Ref Des	Part Number	FSCM	Description	Qty Assy
PC1	E95319	05819	CIRCUIT CARD ASSEMBLY, OSCILLATOR SEE FIG. 7-2 FOR NHA.	REF
C101	APD051	90768	. CAPACITOR 100uf, 3V	3
C107	APD051	90768	. CAPACITOR 100uf, 3V	REF
C109	APD051	90768	. CAPACITOR 100uf, 3V	REF
C102	TE1160	13606	. CAPACITOR 50uf, 15V	1
C103	T350A226K006AS	31433	. CAPACITOR 22uf, 6V	1
C104	APD101	90768	. CAPACITOR 500uf, 3V	1
C105	8131-100-651-474M	72982	. CAPACITOR 0.47uf, 25V	3
C108	8131-100-651-474M	72982	. CAPACITOR 0.47uf, 25V	REF
C110	8131-100-651-474M	72982	. CAPACITOR 0.47uf, 25V	REF
C106	CM15E680J	84171	. CAPACITOR 68pf, 500V	1
C111	9-85PSD-1000-12	05044	. CAPACITOR 1000uf, 12V	1
C113	557-091E-8-50	72982	. CAPACITOR 8-50pf	1
C114	JA-6-100-25-BP	22650	. CAPACITOR 100uf, 15V	1
C115	10TCC-V22	13606	. CAPACITOR 2.2pf, 1KV	1
CR101	1N4148	12065	. DIODE	3
CR102	1N4148	12065	. DIODE	REF
CR103	1N4148	12065	. DIODE	REF
Q101	MPF152 2N5461	15873	. TRANSISTOR FET	1
Q102	2N3905	15873	. TRANSISTOR PNP	3
Q103	2N3905	15873	. TRANSISTOR PNP	REF
Q104	2N3905	15873	. TRANSISTOR PNP	REF
Q105	2N3903	15873	. TRANSISTOR NPN	1
R101	RC07GF302J	01121	. RESISTOR 3K	1
R102	UPE200RE1-SQ05 17	71450	. POTENTIOMETER 10K	1
R103	RC07GF101K	01121	. RESISTOR 100 OHMS	1
R104	RC07GF510J	01121	. RESISTOR 51 OHMS	1
R105	RC07GF180K	01121	. RESISTOR 18 OHMS	1
R106	UPE200RE1-SQ05 14	71450	. POTENTIOMETER 100K	1
R107	RC07GF563K	01121	. RESISTOR 56K	1
R108	RC07GF243J	01121	. RESISTOR 24K	1
R109	RNR55H9311FS	07716	. RESISTOR 9.3K	1
R110	RC07GF121K	01121	. RESISTOR 120 OHMS	1
R111	RC07GF222K	01121	. RESISTOR 2.2K	1
R112	RC07GF161J	01121	. RESISTOR 160 OHMS	1
R113	RC07GF680K	01121	. RESISTOR 68 OHMS	2
R114	RC07GF680K	01121	. RESISTOR 68 OHMS	REF
R115	RNR55H4990FS	07716	. RESISTOR 499 OHMS	1
RT101	[illegible]3012	15801	. THERMISTOR 8K	1
RT102	KA31L1	15801	. THERMISTOR 1K	2
RT103	KA31L1	15801	. THERMISTOR 1K	REF

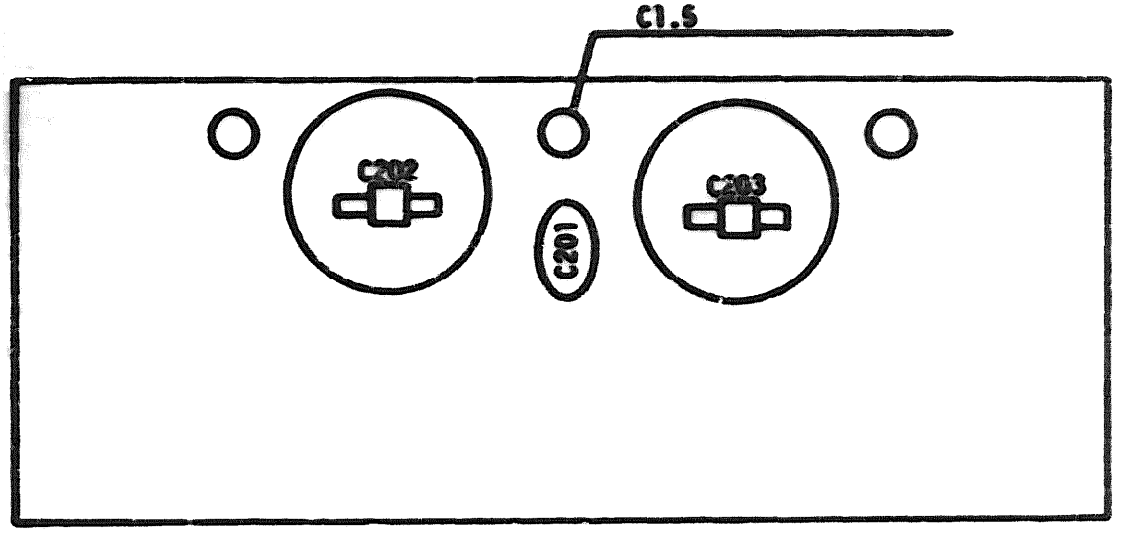

Figure 7-4. Frequency Padding Board, PC2 - Parts Location.

Ref Des	Part Number	FSCM	Description	Qty Assy
PC2	E96335	06819.	CIRCUIT CARD ASSEMBLY, FREQUENCY PADDING SEE FIG. 7-2 FOR NHA.	REF
C201	10TCP-V82	13606	. CAPACITOR 8.2pf, 1KV	1
C202	557-0911C0P010 B	72982	. CAPACITOR 1.5-7pf	1
C203	557-0910C0P0390	72982	. CAPACITOR 5-25pf	1

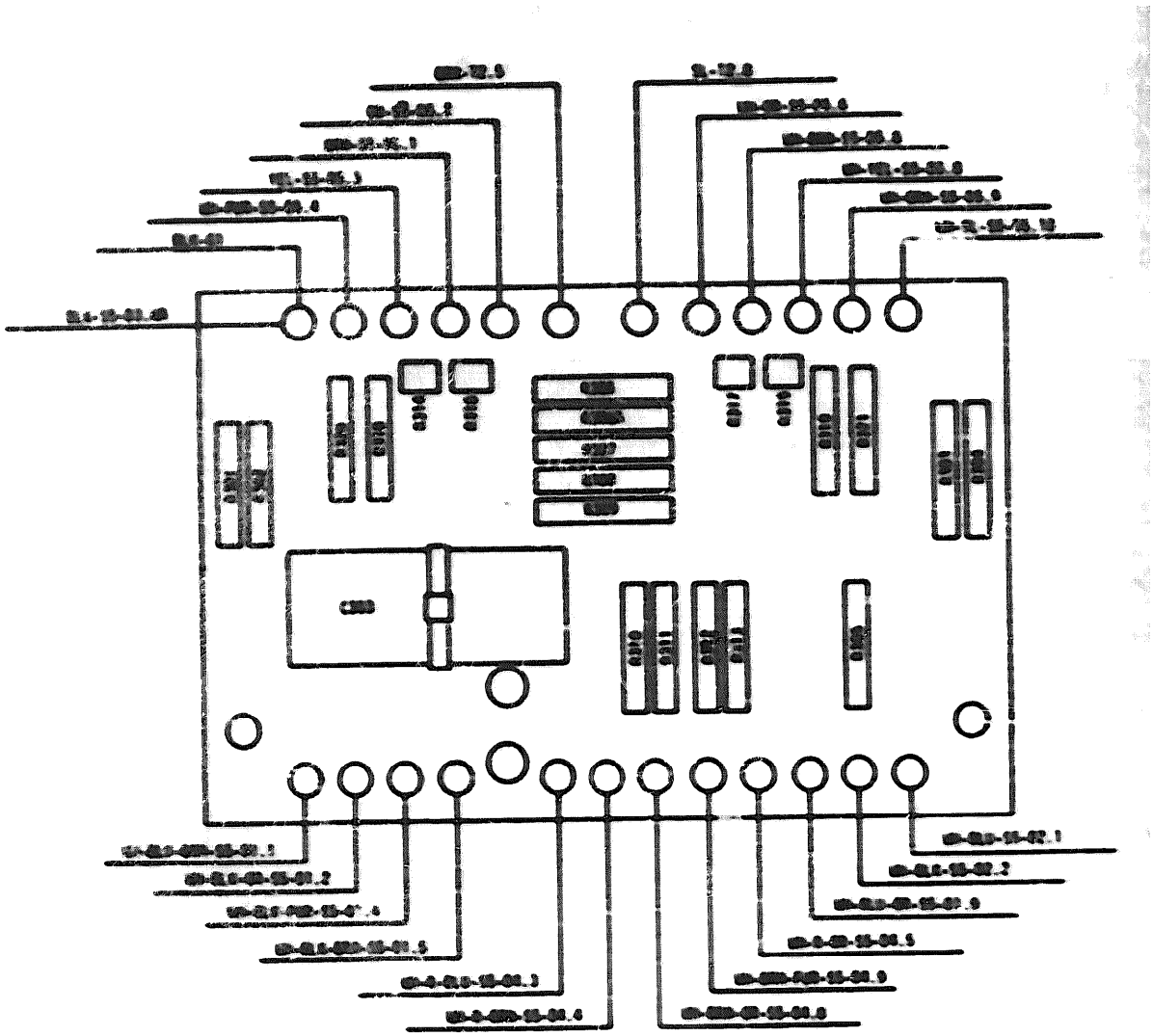

Figure 7-5. Impedance Board, PC3 - Parts Location

PARTS LIST - IMPEDANCE BOARD (FIGURE 7-5)

Ref Des	Part Number	FSCM	Description	Qty Assy
PC3	E95326	06819	CIRCUIT CARD ASSEMBLY, IMPEDANCE SEE FIG. 7-2 FOR NHA.	REF
C301	225P	13606	. CAPACITOR SELECTED VALUE	2
C302	225P	13606	. CAPACITOR SELECTED VALUE	REF
C303	D-2.0-200-10	27735	. CAPACITOR 2uf, 150V	1
R301	RNR65N6650FS	19701	. RESISTOR 665 OHMS	2
R303	RNR65N6650FS	19701	. RESISTOR 665 OHMS	REF
R302	RNR65N15R8FS	19701	. RESISTOR 15.8 OHMS	1
R304	RNR65N2431FS	19701	. RESISTOR 2.43K	1
R305	RNR65N38R3FS	19701	. RESISTOR 38.3 OHMS	1
R306	RNR65N4R22FS	19701	. RESISTOR 4.22 OHMS	1
R306A	RNR65N4420FS	19701	. RESISTOR 442 OHMS	1
R307	RNR65N1431FS	19071	. RESISTOR 1.43K	1
R308	RNR65N30R9FS	19701	. RESISTOR 30.9 OHMS	1
R309	RNR65N2550FS	19071	. RESISTOR 255 OHMS	1
R310	RNR65N34R8FS	19701	. RESISTOR 34.8 OHMS	2
R312	RNR65N34R8FS	19071	. RESISTOR 34.8 OHMS	REF
R311	RNR65N27R4FS	19071	. RESISTOR 27.4 OHMS	2
R313	RNR65N27R4FS	19071	. RESISTOR 27.4 OHMS	REF
R314	RNR60N4500FS	94322	. RESISTOR 450 OHMS	2
R315	RNR60N4500FS	94322	. RESISTOR 450 OHMS	REF
R316	RNR60N3000FS	94322	. RESISTOR 300 OHMS	2
R317	RNR60N3000FS	94322	. RESISTOR 300 OHMS	REF
R318	RNR65N75R0FS	19701	. RESISTOR 75 OHMS	2
R319	RNR65N75R0FS	19071	. RESISTOR 75 OHMS	REF
R320	RNR65N68R1FS	19071	. RESISTOR 68.1 OHMS	2
R321	RNR65N68R1FS	19071	. RESISTOR 68.1 OHMS	REF

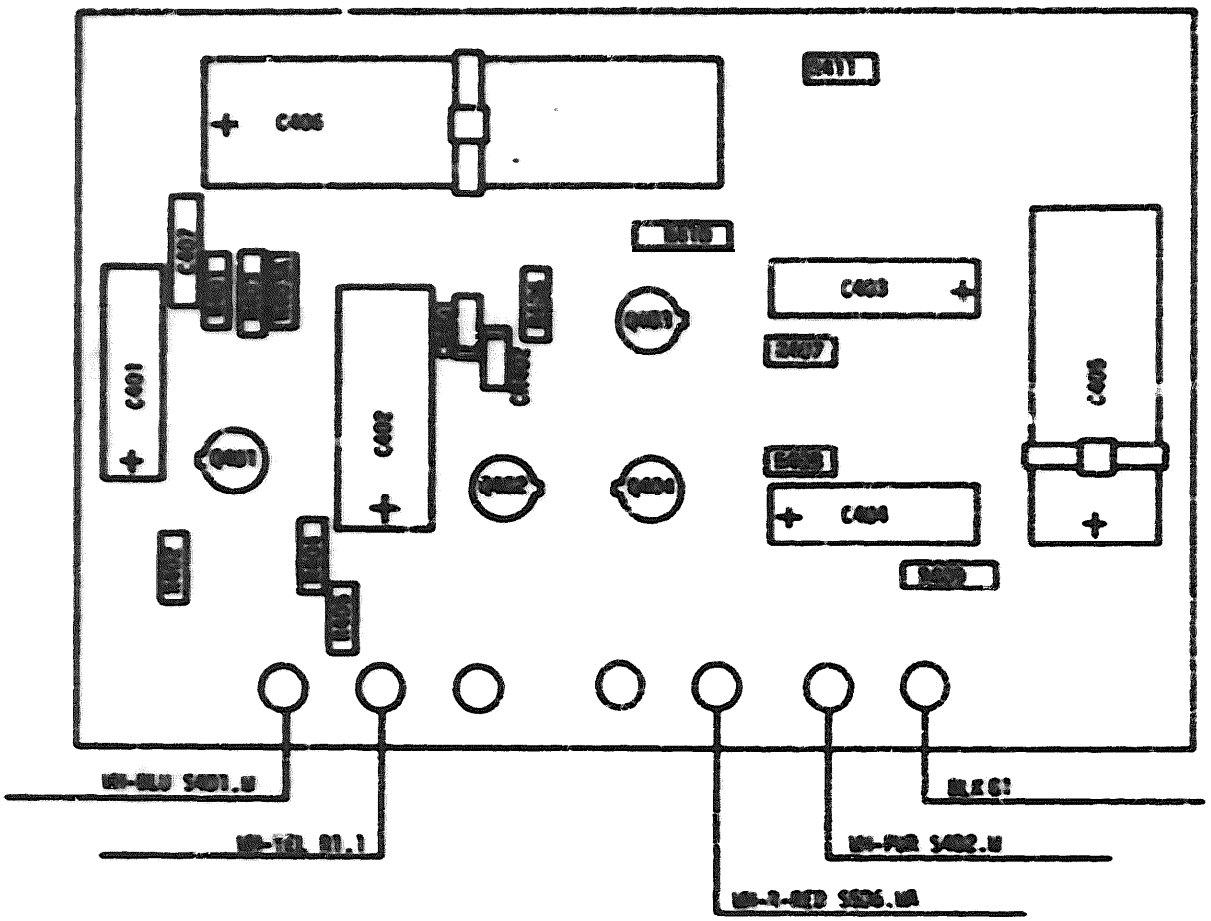

Figure 7-6. Output Amplifier Board, PC4 - Parts Location.

PARTS LIST - OUTPUT AMPLIFIER BOARD (FIGURE 7-6)

Ref Des	Part Number	FSCM	Description	Qty Assy
PC4	E95327	06819	CIRCUIT CARD ASSEMBLY, OUTPUT AMPLIFIER SEE FIG. 7-2 FOR NHA.	REF
C401	TE1157	13606	. CAPACITOR 20uf, 15V	3
C403	TE1157	13606	. CAPACITOR 20uf, 15V	REF
C404	TE1157	13606	. CAPACITOR 20uf, 15V	REF
C402	JA-5-100-12	22650	. CAPACITOR 100uf, 12V	1
C405	ADP115	90768	. CAPACITOR 200uf, 20V	1
C406	JA13-830-15-8F	22650	. CAPACITOR 830uf, 15V	1
C407	CM15E680J	84171	. CAPACITOR 68pf, 500V	1
CR401	1N4148	12065	. DIODE	2
CR402	1N4148	12065	. DIODE	REF
Q401	MPS6515	15873	. TRANSISTOR	1
Q402	2N3905	15873	. TRANSISTOR PNP	2
Q403	2N3905	15873	. TRANSISTOR PNP	REF
Q404	2N3903	15873	. TRANSISTOR NPN	1
R401	RC07GF184K	01121	. RESISTOR 180K	2
R402	RC07GF184K	01121	. RESISTOR 180K	REF
R403	RNR60H6191FS	19701	. RESISTOR 6.19K	1
R403A	RC07GF473K	01121	. RESISTOR 47K	1
R404	RC07GF152K	01121	. RESISTOR 1.5K	1
R405	RC07GF621J	01121	. RESISTOR 620 OHMS	1
R406	RC07GF182K	01121	. RESISTOR 1.8K	1
R407	RC07GF100K	01121	. RESISTOR 10 OHMS	3
R408	RC07GF100K	01121	. RESISTOR 10 OHMS	REF
R411	RC07GF100K	01121	. RESISTOR 10 OHMS	REF
R409	RNR60H75R0FS	19701	. RESISTOR 75 OHMS	1
R410	RNR60H3011FS	19701	. RESISTOR 3.01K	1

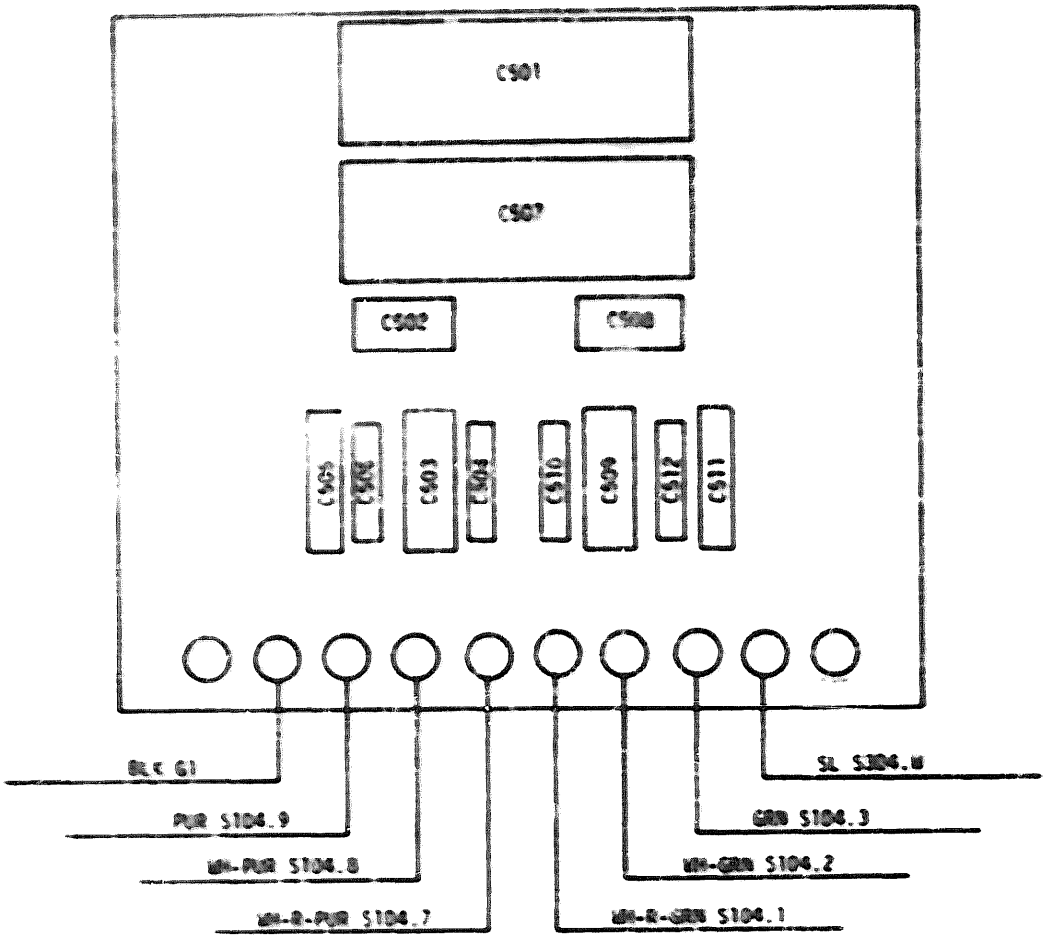

Figure 7-7. Bridge Fixed Cap Board, PC5 - Parts Location

Ref Des	Part Number	FSCM	Description	Qty Assy
PC5	E95351	06819	CIRCUIT CARD ASSEMBLY, BRIDGE FIXED CAP. SEE FIG. 7-2 FOR NHA.	REF
C501	PS11-.27-100-5	27735	. CAPACITOR .27uf, 35V	2
C507	PS11-.27-100-5	27735	. CAPACITOR .27uf, 35V	REF
C503	F310B2702J050	31433	. CAPACITOR .027uf, 50V	2
C509	F310B2702J050	31433	. CAPACITOR .027uf, 50V	REF
C506	F310A2701J050	31433	. CAPACITOR .0027uf, 50V	2
C511	F310A2701J050	31433	. CAPACITOR .0027uf, 50V	REF
C502	SELECTED VALUE	13606	. CAPACITOR	6
C504	SELECTED VALUE	13606	. CAPACITOR	REF
C506	SELECTED VALUE	13606	. CAPACITOR	REF
C508	SELECTED VALUE	13606	. CAPACITOR	REF
C510	SELECTED VALUE	13606	. CAPACITOR	REF
C512	SELECTED VALUE	13606	. CAPACITOR	REF

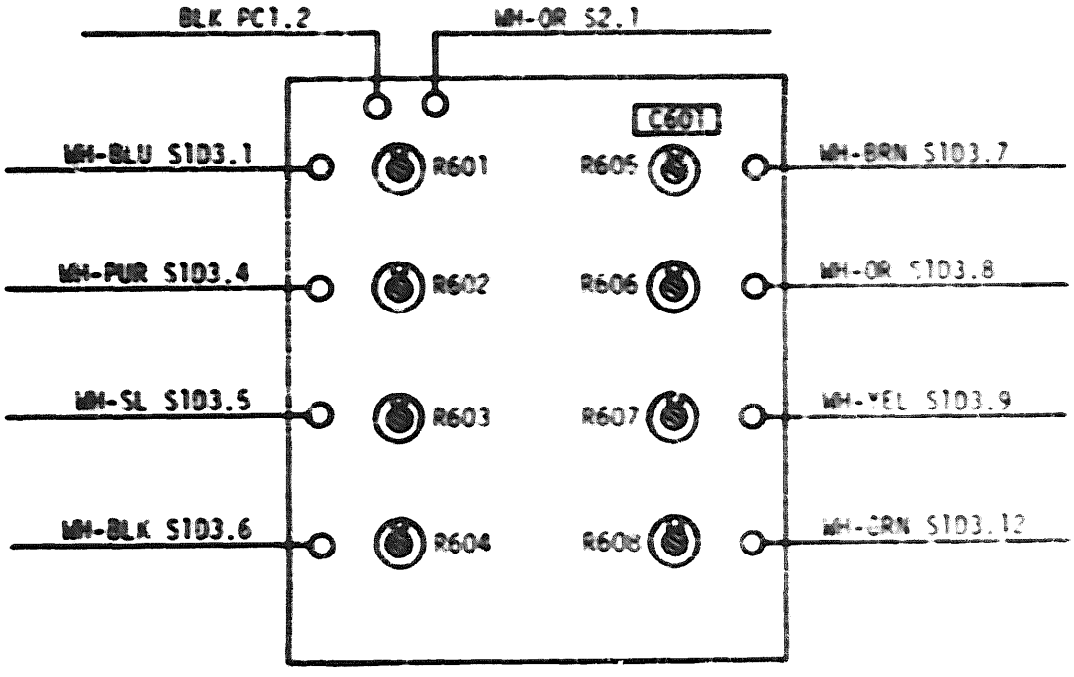

Figure 7-8. Resistor Padding Board, PC6 - Parts Location

Ref Des	Part Number	FSCM	Description	Qty Assy
PC6	E96350	06819	CIRCUIT CARD ASSEMBLY, RESISTOR PADDING SEE FIG. 7-2 FOR RHA.	REF
C601	SELECTED VALUE	13606	. CAPACITOR	1
R601	62P1M	HELTR	. RESISTOR 1M	2
R605	62P1M	HELTR	. RESISTOR 1M	REF
R602	62P50K	30646	. RESISTOR 50K	2
R606	62P50K	30646	. RESISTOR 50K	REF
R603	62P20K	30646	. RESISTOR 20K	2
R607	62P20K	30646	. RESISTOR 20K	REF
R604	62P2K	30646	. RESISTOR 2K	2
R608	62P2K	30646	. RESISTOR 2K	REF

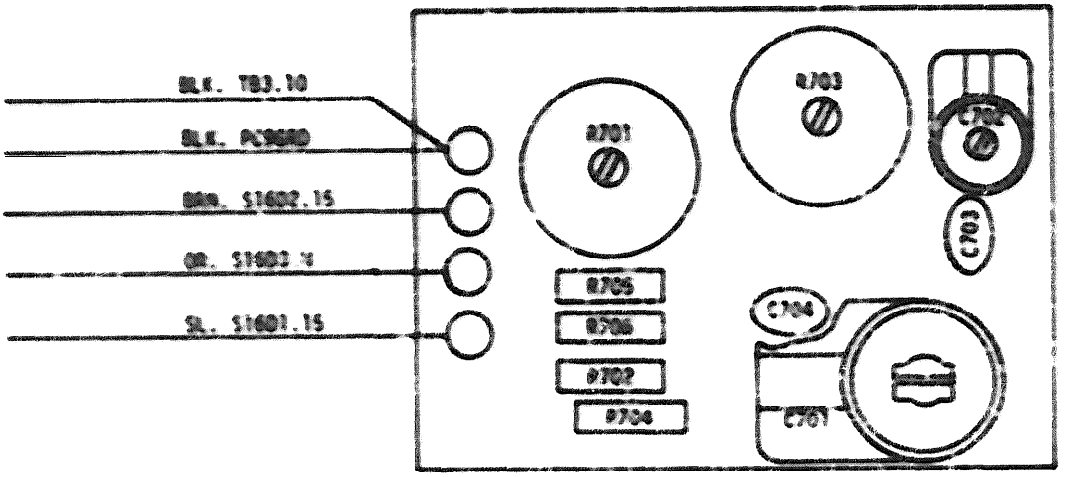

Figure 7-9. 30 db Attenuator and Frequency Adjust Board, PC7 - Parts Location.

Ref Des	Part Number	FSCM	Description	Qty Assy
PC7	E95360	06819	CIRCUIT CARD ASSEMBLY, 30 dB ATTENUATOR AND FREQUENCY ADJUST SEE FIG 7-2 FOR NHA.	REF
C701	503-001-F11-110	72982	. CAPACITOR 11-110pf	1
C702	539-002-C0P098R	72982	. CAPACITOR 1.5-8pf	1
C703	DD-050	71590	. CAPACITOR 5pf, 1KV	1
C704	DD-150	71590	. CAPACITOR 15pf, 1KV	1
R701	UPE200RE1-SR9220	71450	. POTENTIOMETER 1K	1
R702	RC20GF394K	01121	. RESISTOR 390K	3
R705	RC20GF394K	01121	. RESISTOR 390K	REF
R706	RC20GF394K	01121	. RESISTOR 390K	REF
R703	UPE200RE1-SR9318	71450	. POTENTIOMETER 500K	1
R704	RN60N2711FS	19701	. RESISTOR 2.707K	1

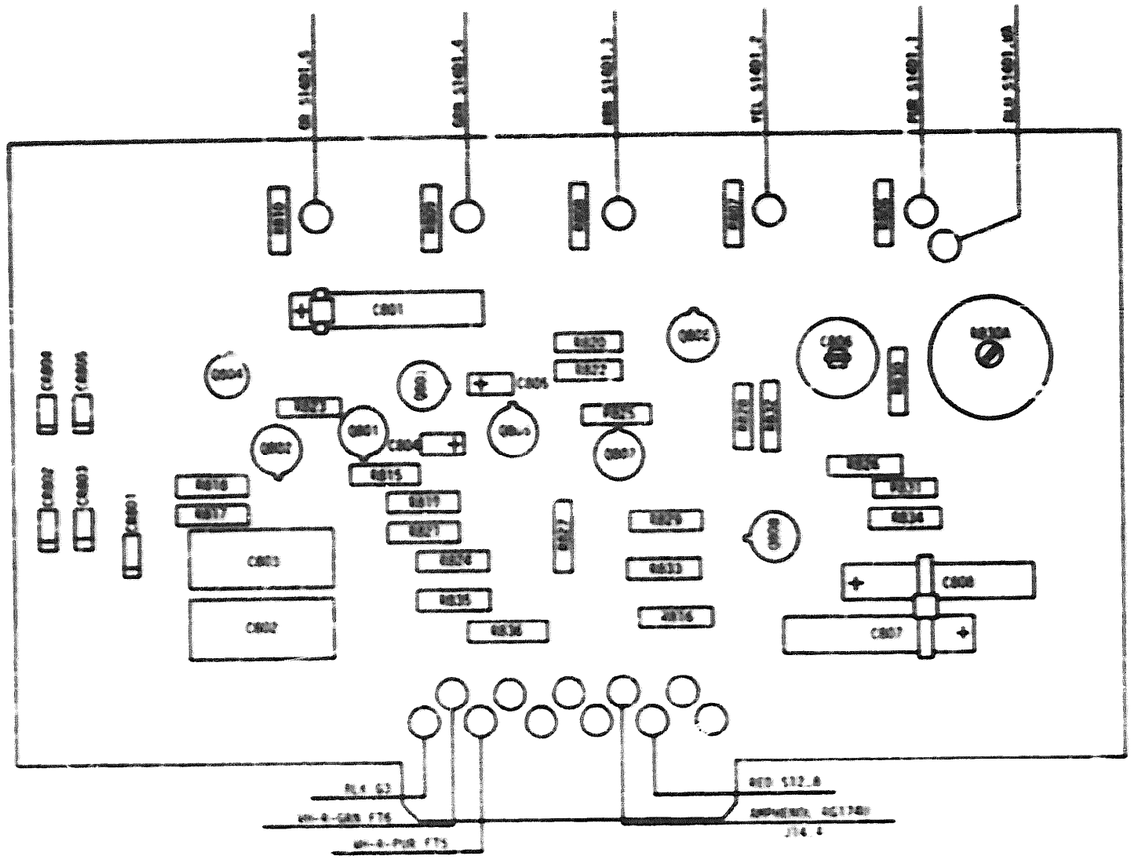

Figure 7-10. Balance Amplifier Board, PC8 - Parts Location.

PARTS LIST - BALANCE AMPLIFIER BOARD (FIGURE 7-10)

Ref Des	Part Number	FSCM	Description	Qty Assy
PC8	E95273	06819	CIRCUIT CARD ASSEMBLY, BALANCE AMPLIFIER SEE FIG. 7-2 FOR NHA.	REF
C801	AP0095	90768	. CAPACITOR 100uf, 20V	3
C807	AP0095	90768	. CAPACITOR 100uf, 20V	REF
C808	AP0095	90768	. CAPACITOR 100uf, 20V	REF
C802	JA-4-3.3-100-8N	22650	. CAPACITOR 2.2uf, 100V	2
C803	JA-4-2.2-100-8N	22560	. CAPACITOR 2.2uf, 100V	REF
C804	T330A225K035AS	31433	. CAPACITOR 2.2uf, 35V	2
C805	T330A225K035AS	31433	CAPACITOR 2.2uf, 35V	REF
C806	557-091E-8-50	72982	. CAPACITOR 8-50pf	1
CR801	1N4148	12065	. DIODE	1
CR802	1N661	01295	. DIODE,SIL	4
CR803	1N661	01295	. DIODE,SIL	REF
CR804	1N661	01295	. DIODE,SIL	REF
CR805	1N661	01295	. DIODE,SIL	REF
Q801	2N3905	15873	. TRANSISTOR PNP	4
Q804	2N3905	15873	. TRANSISTOR PNP	REF
Q805	2N3905	15873	. TRANSISTOR PNP	REF
Q808	2N3905	15873	. TRANSISTOR PNP	REF
Q802	2N3903	15873	. TRANSISTOR NPN	4
Q803	2N3903	15873	. TRANSISTOR NPN	REF
Q806	2N3903	15873	. TRANSISTOR NPN	REF
Q807	2N3903	15873	. TRANSISTOR NPN	REF
R806	RNR60H3010FS	19701	. RESISTOR 301 OHMS	1
R807	RNR60H4870FS	19701	. RESISTOR 487 OHMS	1
R808	RNR60H5360FS	19701	. RESISTOR 536 OHMS	1
R809	RNR60H2941FS	19701	. RESISTOR 2940 OHMS	1
R810	RNR60H1582FS	19701	. RESISTOR 15.8K	1
R815	RC20GF474K	01121	. RESISTOR 470K	1
R817	RC20GF304J	01121	. RESISTOR 300K	2
R824	RC20GF304J	01121	. RESISTOR 300K	REF
R818	RC20GF514J	01121	. RESISTOR 510K	1
R819	RC20GF103K	01121	. RESISTOR 10K	2
R820	RC20GF103K	01121	. RESISTOR 10K	REF
R821	RC20GF511J	01121	. RESISTOR 510 OHMS	1
R822	RC20GF102K	01121	. RESISTOR 1K	1
R823	RNR60H9090FS	19701	. RESISTOR 909 OHMS	1
R825	RC20GF154J	01121	. RESISTOR 150K	1
R826	RC20GF224K	01121	. RESISTOR 220K	1
R827	RC20GF912J	01121	. RESISTOR 9.1K	1
R828	RNR60H4871FS	19701	. RESISTOR 4870 OHMS	1
R829	RC20GF622J	01121	. RESISTOR 6.2K	1
R830	RNR60H3651FS	19701	. RESISTOR 3.65K	1
R831	RNR60H6041FS	19701	. RESISTOR 6.04K	1
R832A	UPE200REL-500-516	71450	. POTENTIOMETER 5K	1
R832	RC20GF122K	01121	. RESISTOR 1.2K	2
R831	RC20GF122K	01121	. RESISTOR 1.2K	REF
R833	RC20GF163J	01121	. RESISTOR 16K	1
R834	RC20GF272J	01121	. RESISTOR 2.7K	1

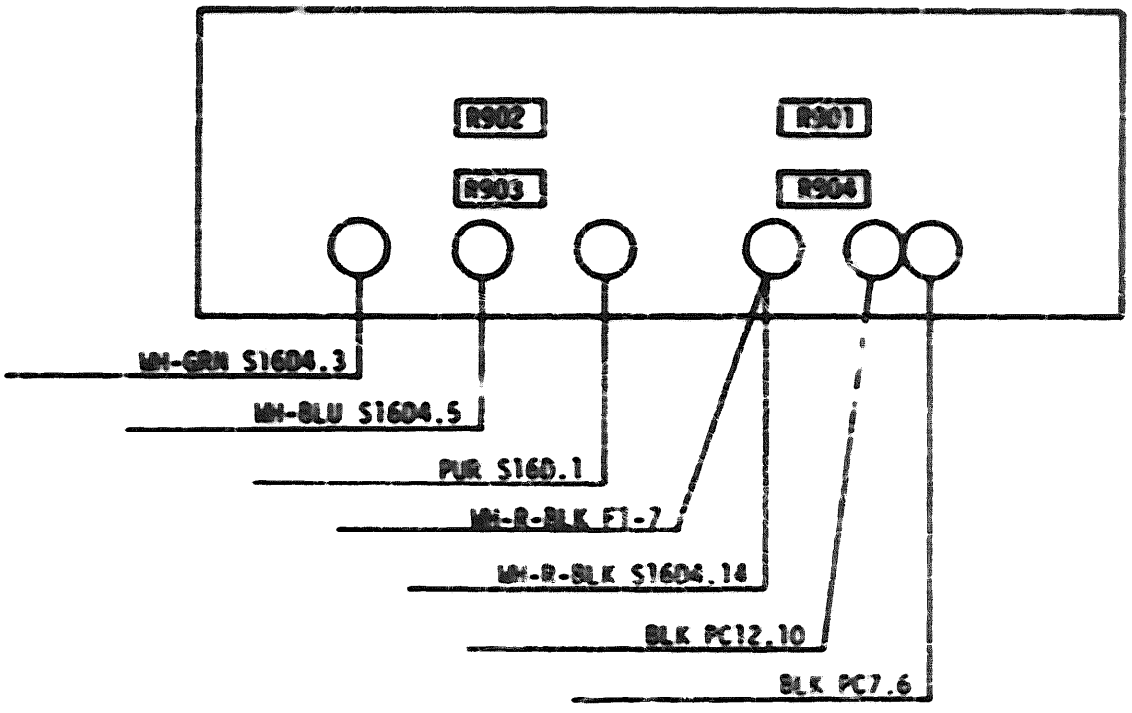

Figure 7-11. Later Atten. Board, PC9 - Parts Location.

Ref Des	Part Number	FSCM	Description	Qty Assy
PC9	E95353	06819	CIRCUIT CARD ASSEMBLY, INTER ATTEN. SEE FIG. 7-2 FOR NHA.	REF
R901	RNR60H7150DS	19701	. RESISTOR 715 OHMS	1
R902	RNR60H2260DS	19701	. RESISTOR 226 OHMS	1
R903	RNR60H71R5DS	19701	. RESISTOR 71.5 OHMS	1
R904	RNR60H33R2DS	19701	. RESISTOR 33.2 OHMS	1

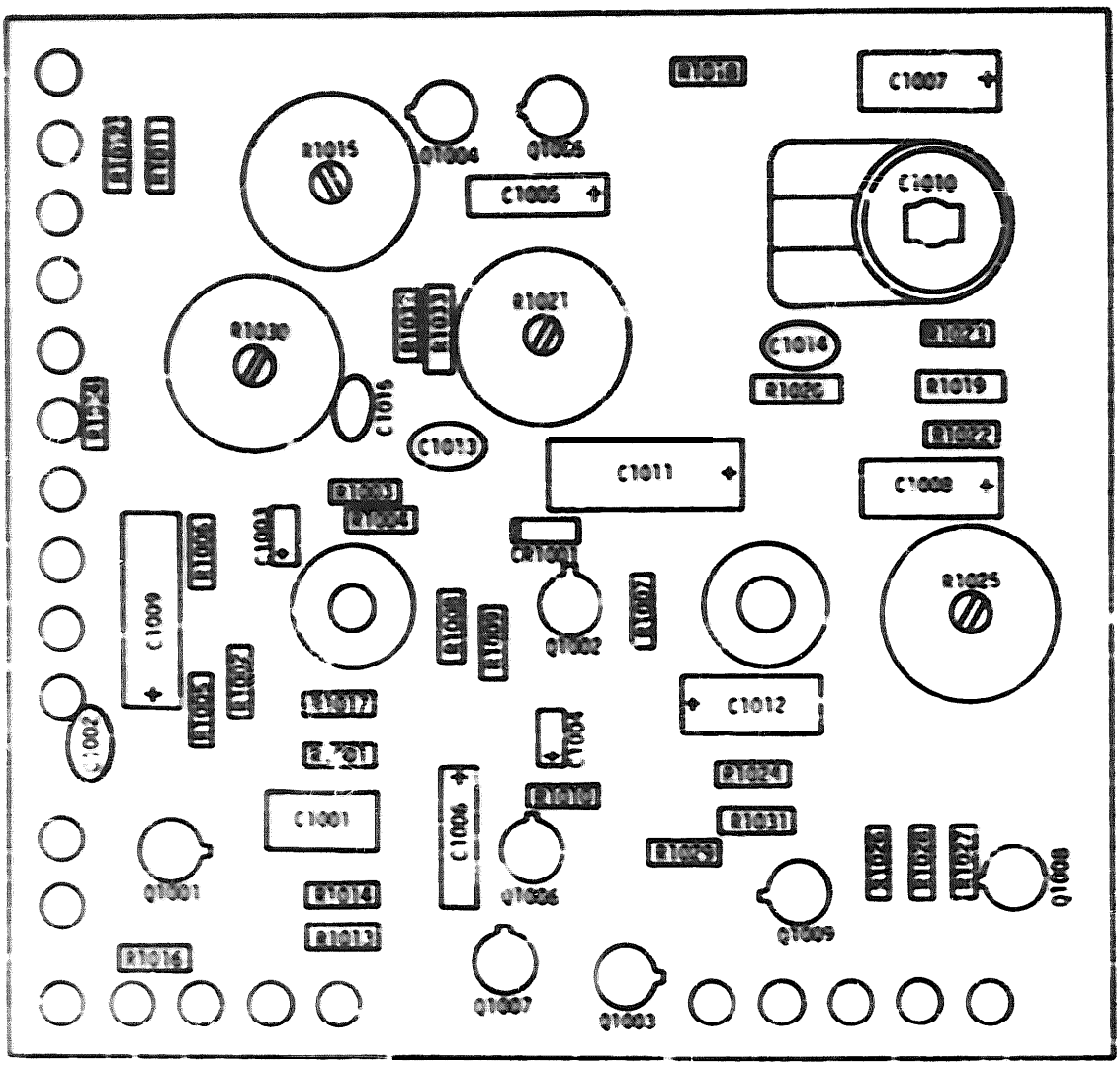

Figure 7-12. Q-IMS Detector Board, PC10 - Parts Location (Sheet 1 of 2).

PARTS LIST - Q-IMS DETECTOR BOARD (FIGURE 7-12)

Ref Des	Part Number	FSCM	Description	Qty Assy
PC10	E95357	06819	CIRCUIT CARD ASSEMBLY, Q-RMS DETECTOR SEE FIG. 7-2 FOR NHA.	REF
C1001	225P4749R75ZD3	13606	. CAPACITOR .47uf, 15V	1
C1002	DD-101	71590	. CAPACITOR 100pf, 1KV	1
C1003	T330A475K025AS	31433	. CAPACITOR 4.7uf, 25V	1
C1004	T330A156K010AS	31433	. CAPACITOR 15uf, 10V	1
C1005	150D106X902D2	13606	. CAPACITOR 10uf, 20V	2
C1006	150D106X902D2	13606	. CAPACITOR 10uf, 20V	REF
C1007	TE1155	13606	. CAPACITOR 10uf, 15V	3
C1008	TE1155	13606	. CAPACITOR 10uf, 15V	REF
C1012	TE1155	13606	. CAPACITOR 10uf, 15V	REF
C1009	AP0046	90768	. CAPACITOR 20uf, 25V	1
C1010	503-001-F11-110	72982	. CAPACITOR 11-110pf	1
C1011	TE1160	13606	. CAPACITOR 50uf, 15V	1
C1013	DD-330	71590	. CAPACITOR 33pf, 1KV	1
C1014	DD-151	71590	. CAPACITOR 151pf, 1KV	1
C1015	SELECTED VALUE	13606	. CAPACITOR	1
CR1001	1N4148	12065	. DIODE	1
Q1001	2N3903	15873	. TRANSISTOR NPN	5
Q1006	2N3903	15873	. TRANSISTOR NPN	REF
Q1007	2N3903	15873	. TRANSISTOR NPN	REF
Q1008	2N3903	15873	. TRANSISTOR NPN	REF
Q1009	2N3903	15873	. TRANSISTOR NPN	REF
Q1002	2N3905	15873	. TRANSISTOR PNP	4
Q1003	2N3905	15873	. TRANSISTOR PNP	REF
Q1004	2N3905	15873	. TRANSISTOR PNP	REF
Q1005	2N3905	15873	. TRANSISTOR PNP	REF
R1001	RC07GF334K	01121	. RESISTOR 330K	1
R1002	RC07GF104K	01121	. RESISTOR 100K	1
R1003	RC07GF153K	01121	. RESISTOR 15K	2
R1004	RC07GF153K	01121	. RESISTOR 15K	REF
R1005	RC07GF682K	01121	. RESISTOR 6.8K	1
R1006	RC07GF102K	01121	. RESISTOR 1K	5
R1018	RC07GF102K	01121	. RESISTOR 1K	REF
R1027	RC07GF102K	01121	. RESISTOR 1K	REF
R1028	RC07GF102K	01121	. RESISTOR 1K	REF
R1029	RC07GF102K	01121	. RESISTOR 1K	REF
R1007	RC07GF562K	01121	. RESISTOR 5.6K	1
R1008	RC07GF122K	01121	. RESISTOR 1.2K	3
R1009	RC07GF122K	01121	. RESISTOR 1.2K	REF
R1024	RC07GF122K	01121	. RESISTOR 1.2K	REF
R1010	RC07GF101K	01121	. RESISTOR 100 OHMS	2
R1017	RC07GF101K	01121	. RESISTOR 100 OHMS	REF
R1011	RC07GF222K	01121	. RESISTOR 2.2K	1
R1012	RC07GF123K	01121	. RESISTOR 12K	2
R1014	RC07GF123K	01121	. RESISTOR 12K	REF
R1013	RC07GF272K	01121	. RESISTOR 2.7K	1

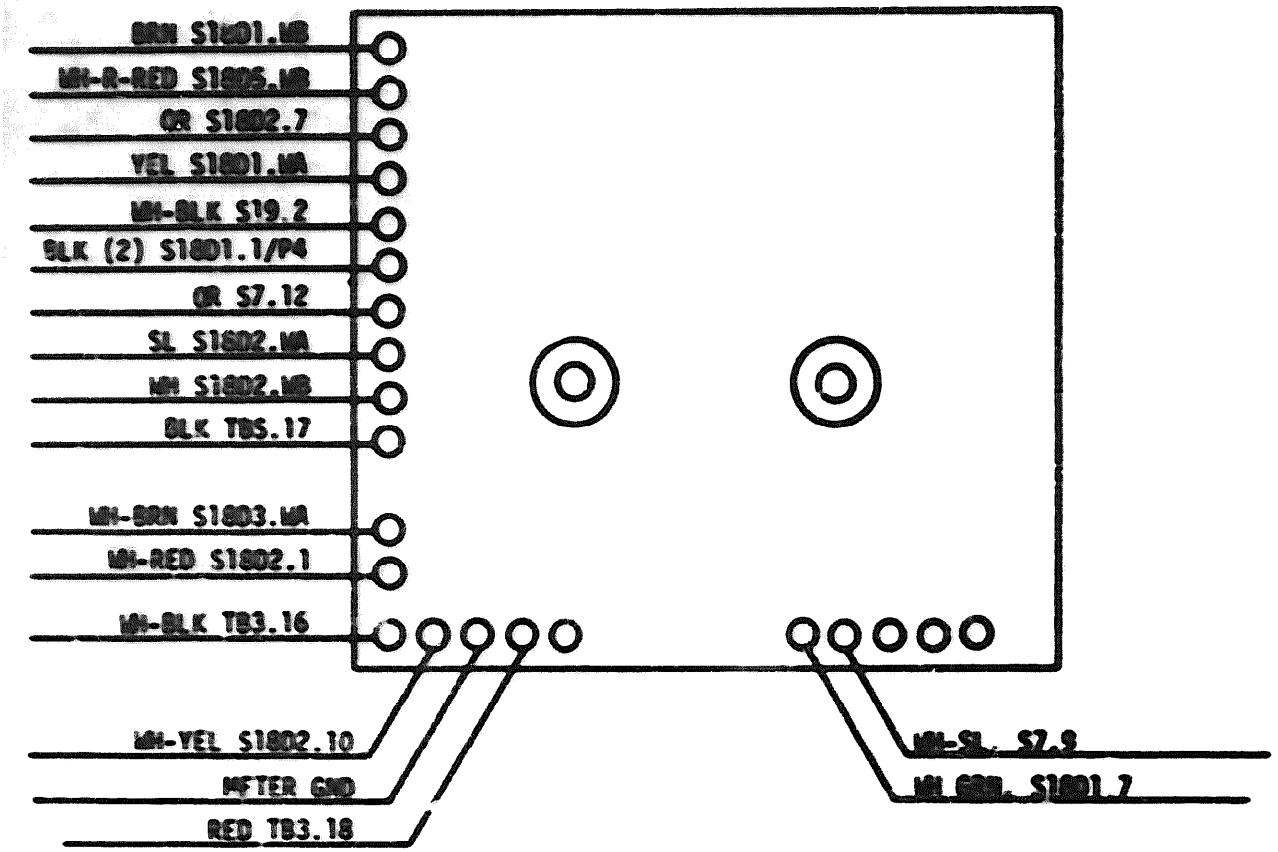

Figure 7-12. Detector Board, PC10 - Parts Location (Sheet 2 of 2).

Ref Des	Part Number	FSCM	Description	Qty Assy
R1015	UPE200RE1-SR93 20	71450	. POTENTIOMETER 1K	2
R1030	UPE200RE1-SR93 20	71450	. POTENTIOMETER 1K	REF
R1016	RC20GF433J	01121	. RESISTOR 43K	1
R1019	RNR60H1301FS	19701	. RESISTOR 1.30K	1
R1020	RNR60H3010FS	19701	. RESISTOR 301 OHMS	1
R1021	UPE200RE1-SQ85 14	71450	. POTENTIOMETER 100K	2
R1025	UPE200RE1-SQ85 14	71450	. POTENTIOMETER 100K	REF
R1022	RC07GF681K	01121	. RESISTOR 680 OHMS	1
R1023	RC07GF271K	01121	. RESISTOR 270 OHMS	1
R1026	RC07GF820K	01121	. RESISTOR 82 OHMS	1
R1031	RC07GF391K	01121	. RESISTOR 390 OHMS	1
R1032	RC07GF182K	01121	. RESISTOR 1.8K	1
R1033	RNR60H2001FS	19701	. RESISTOR 2K	1
R1034	RC07GF332K	01121	. RESISTOR 3.3K	1

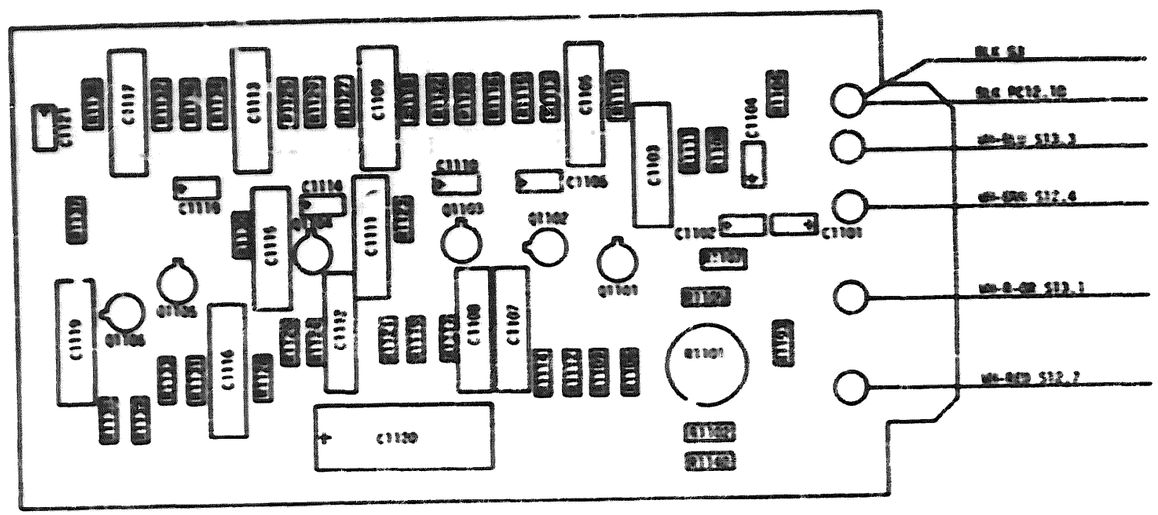

Figure 7-13. C MTC/CCITT Board, Pc11 - Parts Location

PARTS LIST - C MTG/CCITT (FIGURE 7-13)

Ref Des	Part Number	FSCM	Description	Qty Ass
PC11	E95362	06819	CIRCUIT CARD ASSEMBLY, C MTG/CCITT SEE FIG. 7-2 FOR NHA.	REF
C1101	T330A224K050AS	31433	. CAPACITOR .22uf, 50V	
C1102	T330A104K050AS	31433	. CAPACITOR .1uf, 50V	
C1103	225P56291WD3	13606	. CAPACITOR .0056uf, 100V	
C1104	T330A105K035AS	31433	. CAPACITOR 1uf, 35V	
C1105	225P15391WD3	13606	. CAPACITOR .015uf, 100V	4
C1109	225P15391WD3	13606	. CAPACITOR .015uf, 100V	REF
C1113	225P15391WD3	13606	. CAPACITOR .015uf, 100V	REF
C1117	225P15391WD3	13606	. CAPACITOR .015uf, 100V	REF
C1106	T330A226K006AS	31433	. CAPACITOR 22uf, 6V	4
C1110	T330A226K006AS	31433	. CAPACITOR 22uf, 6V	REF
C1114	T330A226K006AS	31433	. CAPACITOR 22uf, 6V	REF
C1118	T330A226K006AS	31433	. CAPACITOR 22uf, 6V	REF
C1107	225P1239WD3	13606	. CAPACITOR .012uf, 100V	4
C1111	225P1239WD3	13606	. CAPACITOR .012uf, 100V	REF
C1115	225P1239WD3	13606	. CAPACITOR .012uf, 100V	REF
C1119	225P1239WD3	13606	. CAPACITOR .012uf, 100V	REF
C1108	225P56391WD3	13606	. CAPACITOR .056uf, 100V	3
C1112	225P56391WD3	13606	. CAPACITOR .056uf, 100V	REF
C1116	225P56391WD3	13606	. CAPACITOR .056uf, 100V	REF
C1120	JA-6-100-25-8P	22650	. CAPACITOR 100uf, 12V	1
C1121	T330A225K035AS	31433	. CAPACITOR 2.2uf, 35V	1
Q1101	MPS6518	15873	. TRANSISTOR	1
Q1102	2N3905	15873	. TRANSISTOR PNP	5
Q1103	2N3905	15873	. TRANSISTOR PNP	REF
Q1104	2N3905	15873	. TRANSISTOR PNP	REF
Q1105	2N3905	15873	. TRANSISTOR PNP	REF
Q1106	2N3905	15873	. TRANSISTOR PNP	REF
R1101	500	07716	. POTENTIOMETER	1
R1102	SELECTED VALUE	01121	. RESISTOR	2
R1104	SELECTED VALUE	01121	. RESISTOR	REF
R1103	RC07GF103K	01121	. RESISTOR 10K	5
R1111	RC07GF103K	01121	. RESISTOR 10K	REF
R1117	RC07GF103K	01121	. RESISTOR 10K	REF
R1124	RC07GF103K	01121	. RESISTOR 10K	REF
R1131	RC07GF103K	01121	. RESISTOR 10K	REF
R1105	RC07GF273K	01121	. RESISTOR 27K	1
R1106	RC07GF683K	01121	. RESISTOR 68K	1
R1107	RC07GF392K	01121	. RESISTOR 3.9K	1
R1108	RC07GF333K	01121	. RESISTOR 33K	5
R1112	RC07GF333K	01121	. RESISTOR 33K	REF
R1119	RC07GF333K	01121	. RESISTOR 33K	REF
R1126	RC07GF333K	01121	. RESISTOR 33K	REF
R1133	RC07GF333K	01121	. RESISTOR 33K	REF
R1109	RC07GF472K	01121	. RESISTOR 4.7K	1
R1110	RC07GF563K	01121	. RESISTOR 56K	4

PARTS LIST - C MTG/CCITT (FIGURE 7-13) (Cont.)

Ref Des	Part Number	FSCM	Description	Qty Assy
R1118	RC07GF563K	01121	. RESISTOR 56K	REF
R1125	RC07GF563K	01121	. RESISTOR 56K	REF
R1132	RC07GF563K	01121	. RESISTOR 56K	REF
R1113	RC07GF682K	01121	. RESISTOR 6.8K	8
R1114	RC07GF682K	01121	. RESISTOR 6.8K	REF
R1120	RC07GF682K	01121	. RESISTOR 6.8K	REF
R1121	RC07GF682K	01121	. RESISTOR 6.8K	REF
R1127	RC07GF682K	01121	. RESISTOR 6.8K	REF
R1128	RC07GF682K	01121	. RESISTOR 6.8K	REF
R1134	RC07GF682K	01121	. RESISTOR 6.8K	REF
R1135	RC07GF682K	01121	. RESISTOR 6.8K	REF
R1115	RC07GF471K	01121	. RESISTOR 470 OHMS	3
R1122	RC07GF471K	01121	. RESISTOR 470 OHMS	REF
R1129	RC07GF471K	01121	. RESISTOR 470 OHMS	REF
R1116	RC07GF101K	01121	. RESISTOR 100 OHMS	4
R1123	RC07GF101K	01121	. RESISTOR 100 OHMS	REF
R1130	RC07GF101K	01121	. RESISTOR 100 OHMS	REF
R1137	RC07GF101K	01121	. RESISTOR 100 OHMS	REF
R1136	RC07GF271K	01121	. RESISTOR 270 OHMS	1
R1138	RC07GF152K	01121	. RESISTOR 1.5K	1
R1139	RC07GF391K	01121	. RESISTOR 390 OHMS	1
R1140	RC07GF102K	01121	. RESISTOR 1K	1

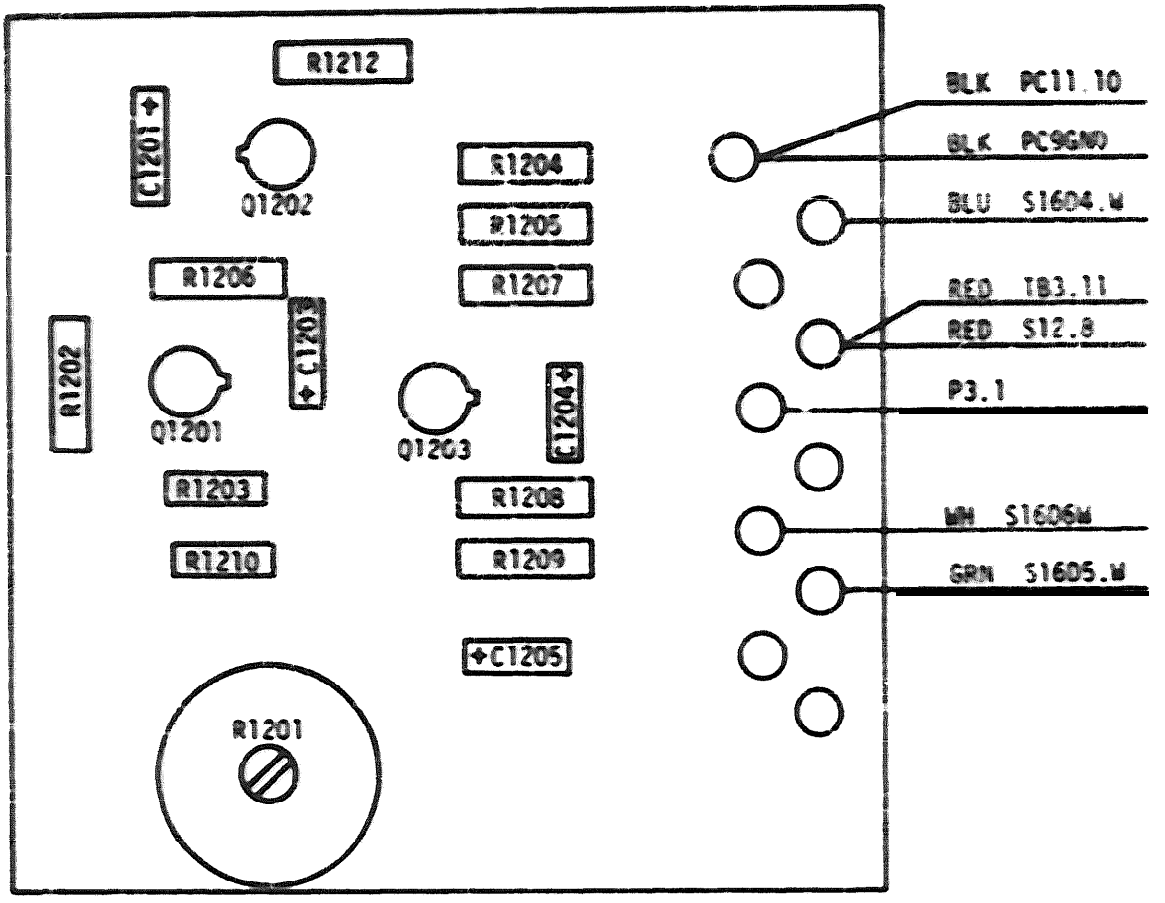

Figure 7-14. Inter. Amplifier Board, PC12 - Parts Location.

PARTS LIST - INTER. AMPLIFIER BOARD (FIGURE 7-14)

Ref Des	Part Number	FSCM	Description	Qty Assy
PC12	E95275	06819	CIRCUIT CARD ASSEMBLY, INTER AMPLIFIER SEE FIG. 7-2 FOR NHA.	REF
C1201	T330A475K025AS	31433	. CAPACITOR 4.7uf, 25V	1
C1203	T330A685K020AS	31433	. CAPACITOR 6.8uf, 20V	1
C1204	T330A156K010AS	31433	. CAPACITOR 15uf, 10V	1
C1205	T330A226K006AS	31433	. CAPACITOR 22uf, 6V	1
Q1201	2N3905	15873	. TRANSISTOR PNP	3
Q1202	2N3905	15873	. TRANSISTOR PNP	REF
Q1203	2N3905	15873	. TRANSISTOR PNP	REF
R1201	UPE200RE1-SW1817	71450	. POTENTIOMETER 2K	1
R1202	RC20GF154J	01121	. RESISTOR 150K	1
R1203	RNR60H301GFS	19701	. RESISTOR 301 OHMS	1
R1204	RC20GF333J	01121	. RESISTOR 33K	2
R1205	RC20GF333J	01121	. RESISTOR 33K	REF
R1206	SELECTED VALUE	01121	. RESISTOR	1
R1207	RC20GF222J	01121	. RESISTOR 2.2K	2
R1209	RC20GF222J	01121	. RESISTOR 2.2K	REF
R1208	RC20GF391K	01121	. RESISTOR 390 OHMS	1
R1210	RNR60H8251FS	19701	. RESISTOR 8.25K	1
R1212	RC20GF102K	01121	. RESISTOR 1K	1

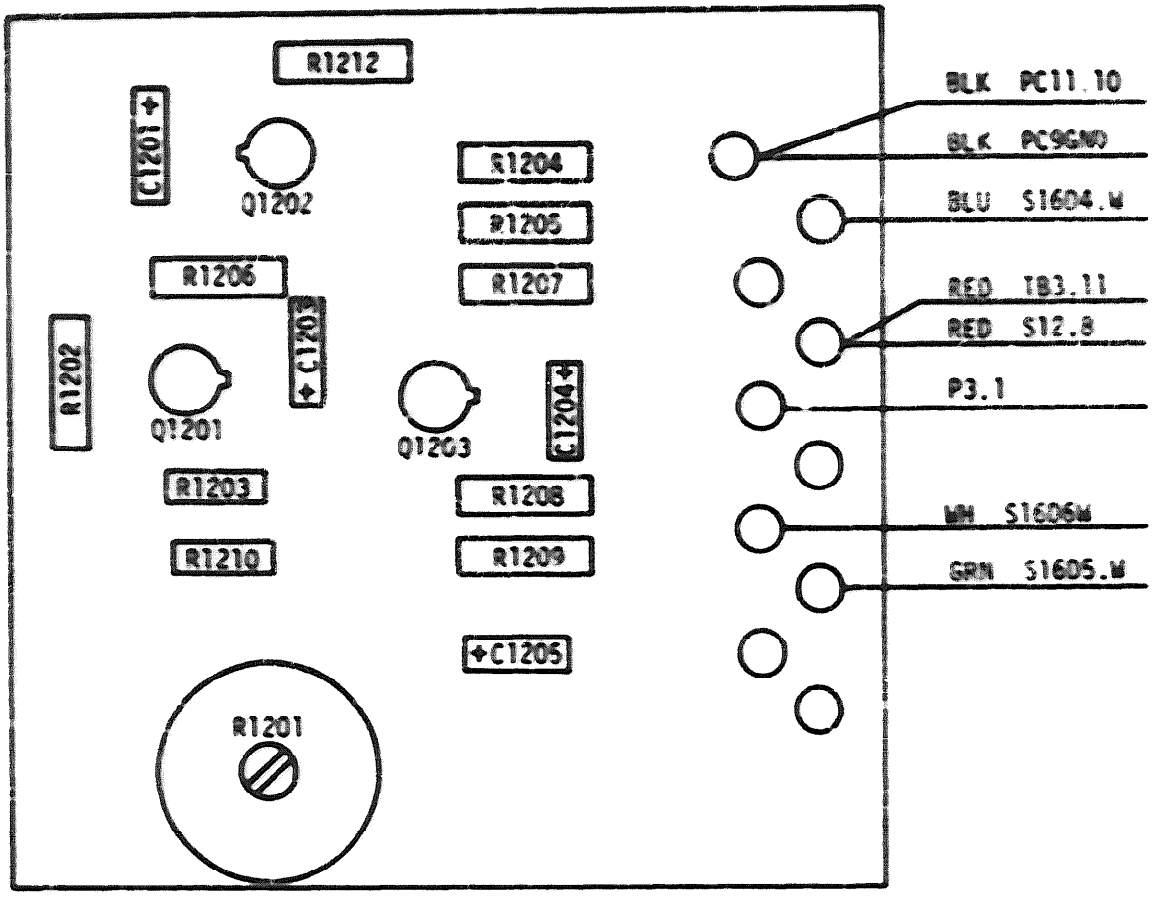

Figure 7-14. Inter Amplifier Board, PC12 - Parts Location.

PARTS LIST - INTER. AMPLIFIER BOARD (FIGURE 7-14)

Ref Des	Part Number	FSCM	Description	Qty Assy
PC12	E95275	06819	CIRCUIT CARD ASSEMBLY, INTER AMPLIFIER SEE FIG. 7-2 FOR NHA.	REF
C1201	T330A475K025AS	31433	. CAPACITOR 4.7uf, 25V	1
C1203	T330A685K020AS	31433	. CAPACITOR 6.8uf, 20V	1
C1204	T330A156K010AS	31433	. CAPACITOR 15uf, 10V	1
C1206	T330A226K006AS	31433	. CAPACITOR 22uf, 6V	1
Q1201	2N3906	15873	. TRANSISTOR PNP	3
Q1202	2N3906	15873	. TRANSISTOR PNP	REF
Q1203	2N3906	15873	. TRANSISTOR PNP	REF
R1201	UPE200RE1-SW1817	71450	. POTENTIOMETER 2K	1
R1202	RC20GF154J	01121	. RESISTOR 150K	1
R1203	RNR60H3010FS	19701	. RESISTOR 301 OHMS	1
R1204	RC20GF333J	01121	. RESISTOR 33K	2
R1205	RC20GF333J	01121	. RESISTOR 33K	REF
R1206	SELECTED VALUE	01121	. RESISTOR	1
R1207	RC20GF222J	01121	. RESISTOR 2.2K	2
R1209	RC20GF222J	01121	. RESISTOR 2.2K	REF
R1208	RC20GF391K	01121	. RESISTOR 390 OHMS	1
R1210	RNR60H8251FS	19701	. RESISTOR 8.25K	1
R1212	RC20GF102K	01121	. RESISTOR 1K	1

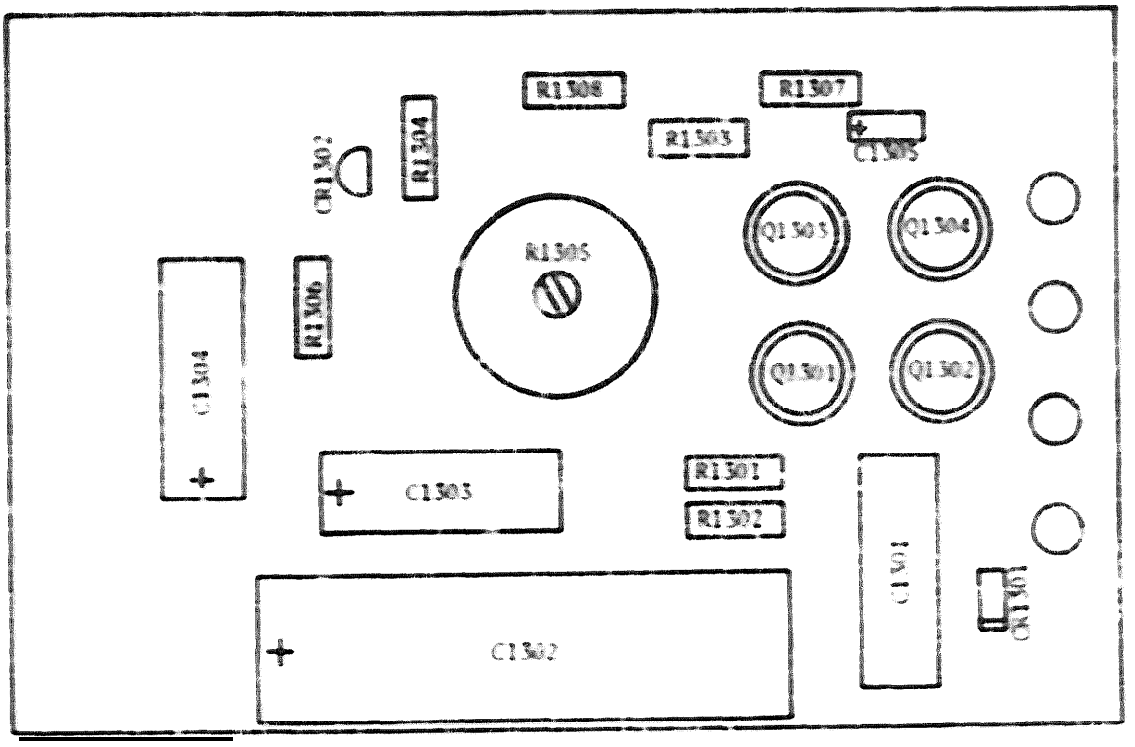

Figure 7-15. -12 V Regulator Board, PC13 - Parts Location.

PARTS LIST - 12V REGULATOR BOARD (FIGURE 7-15)

Ref Des	Part Number	FSCM	Description	Qty Assy
PC13	E95312	06819	CIRCUIT CARD ASSEMBLY, -12 V REGULATOR SEE FIG 7-2 FOR NHA.	REF
C1301	225P10491WD3	13606	. CAPACITOR .1uf, 100V	1
C1302	39D207G025EJ4	13606	. CAPACITOR 200uf, 25V	1
C1303	AP0046	90768	. CAPACITOR 20uf, 25V	2
C1304	AP0046	90768	. CAPACITOR 20uf, 25V	REF
C1305	T330A156K010AS	31433	. CAPACITOR 15uf, 10V	1
CR1301	1N4004	12065	. DIODE IF 1A	1
CR1302	SELECTED VALUE	06819	. DIODE ZENER	1
Q1301	2N4356	17803	. TRANSISTOR	4
Q1302	2N4356	17803	. TRANSISTOR	REF
Q1303	2N4356	17803	. TRANSISTOR	REF
Q1304	2N4356	17803	. TRANSISTOR	REF
R1301	RC20GF272K	01121	. RESISTOR 2.7K	2
R1302	RC20GF272K	01121	. RESISTOR 2.7K	REF
R1303	RC20GF392J	01121	. RESISTOR 3.9K	1
R1304	RC20GF682K	01121	. RESISTOR 6.8K	1
R1305	UPE200RE1-SQ85 16	71450	. POTENTIOMETER 5K	1
R1306	RC20GF103K	01121	. RESISTOR 10K	3
R1307	RC20GF103K	01121	. RESISTOR 10K	REF
R1308	RC20GF103K	01121	. RESISTOR 10K	REF

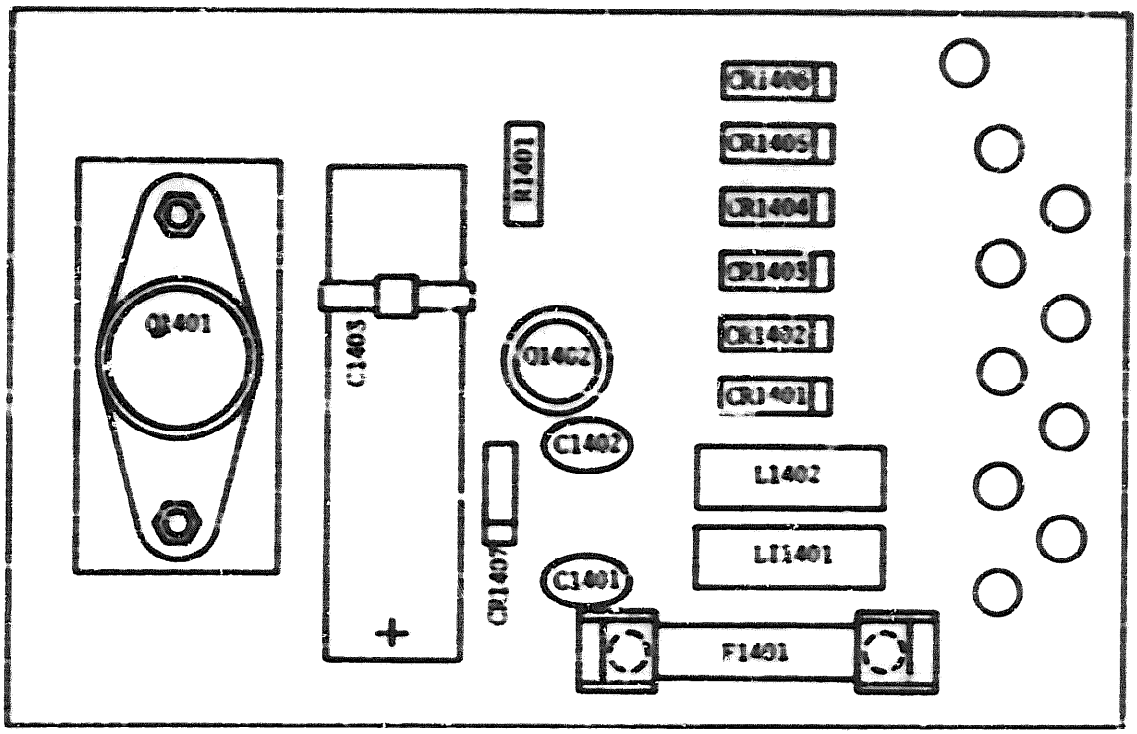

Figure 7-16. -18V Regulator Board, PC14 - Parts Locations.

Ref Des	Part Number	FSCM	Description	Qty Assy
PC14	E95315	06819	CIRCUIT CARD ASSEMBLY, -18 V REGULATOR SEE FIG. 7-2 FOR NHA.	REF
C1401	DD-471	71590	. CAPACITOR 470pf, 1KV	2
C1402	DD-471	71590	. CAPACITOR 470pf, 1KV	REF
C1403	TE1309	13606	. CAPACITOR 100uf, 50V	1
CR1401	1N4004	12065	. DIODE IF 1A	6
CR1402	1N4004	12065	. DIODE IF 1A	REF
CR1403	1N4004	12065	. DIODE IF 1A	REF
CR1404	1N4004	12065	. DIODE IF 1A	REF
CR1405	1N4004	12065	. DIODE IF 1A	REF
CR1406	1N4004	12065	. DIODE IF 1A	REF
CR1407	1N967	12065	. DIODE DO-7 400M	1
F1401	3AG	75915	. FUSE	1
L1401	9350-08	REMOR	. INDUCTOR 100UH	2
L1402	9350-08	REMOR	. INDUCTOR 100UH	REF
Q1401	2N3054	49671	. TRANSISTOR	1
Q1402	2N4036	49671	. TRANSISTOR	1
R1401	RC20GF472K	01121	. RESISTOR 4.7K	1

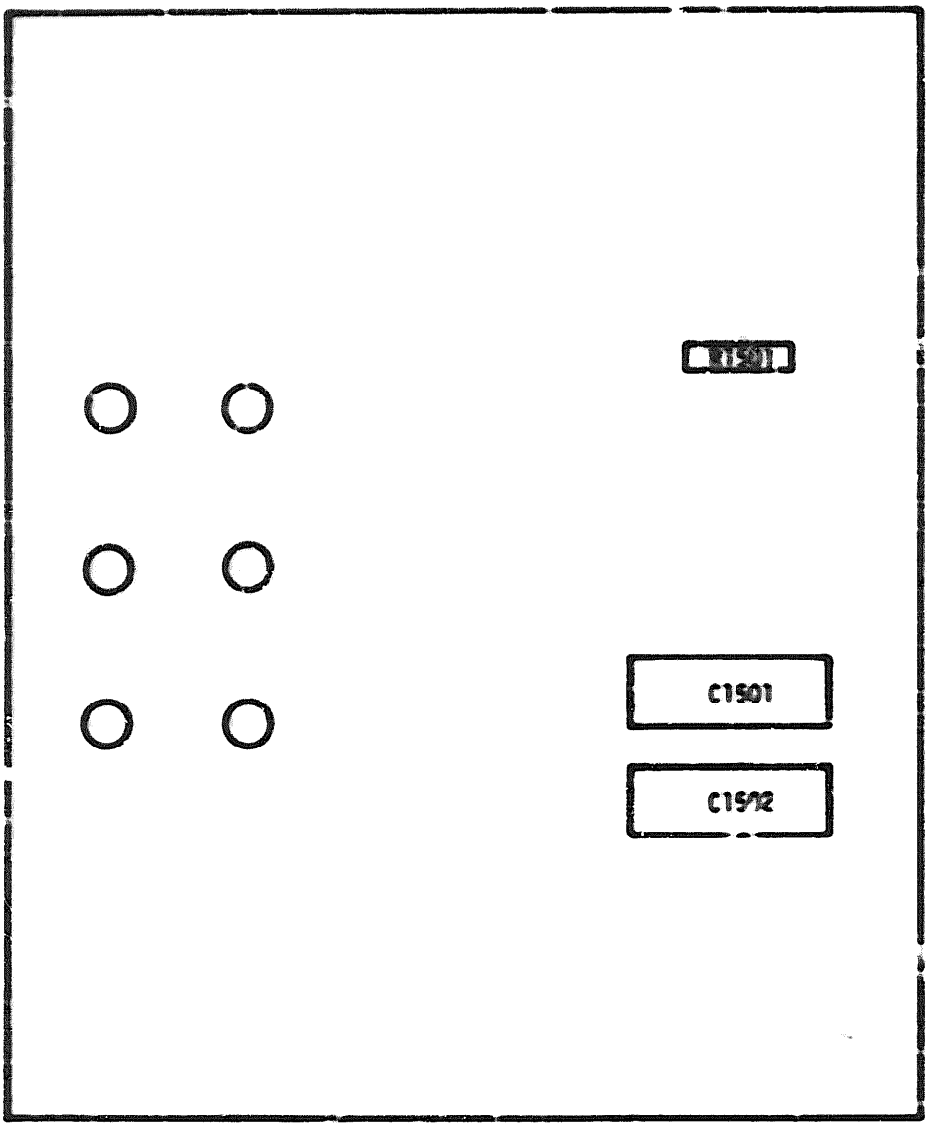

Figure 7-17. Noise to Ground Attenuator Board, T36 - Parts Location.

Ref Des	Part Number	FSCM	Description	Qty Assy
T36	E95626	06819	NOISE TO GROUND ATTENUATOR BOARD, SEE FIG. 7-2 FOR NHA.	REF
C1501	320005030	06819	CAPACITOR .05uf, 50V	3
C1502	320005030	06819	CAPACITOR .05uf, 50V	REF
R1501	220249301	06819	RESISTOR, 499 OHMS	1

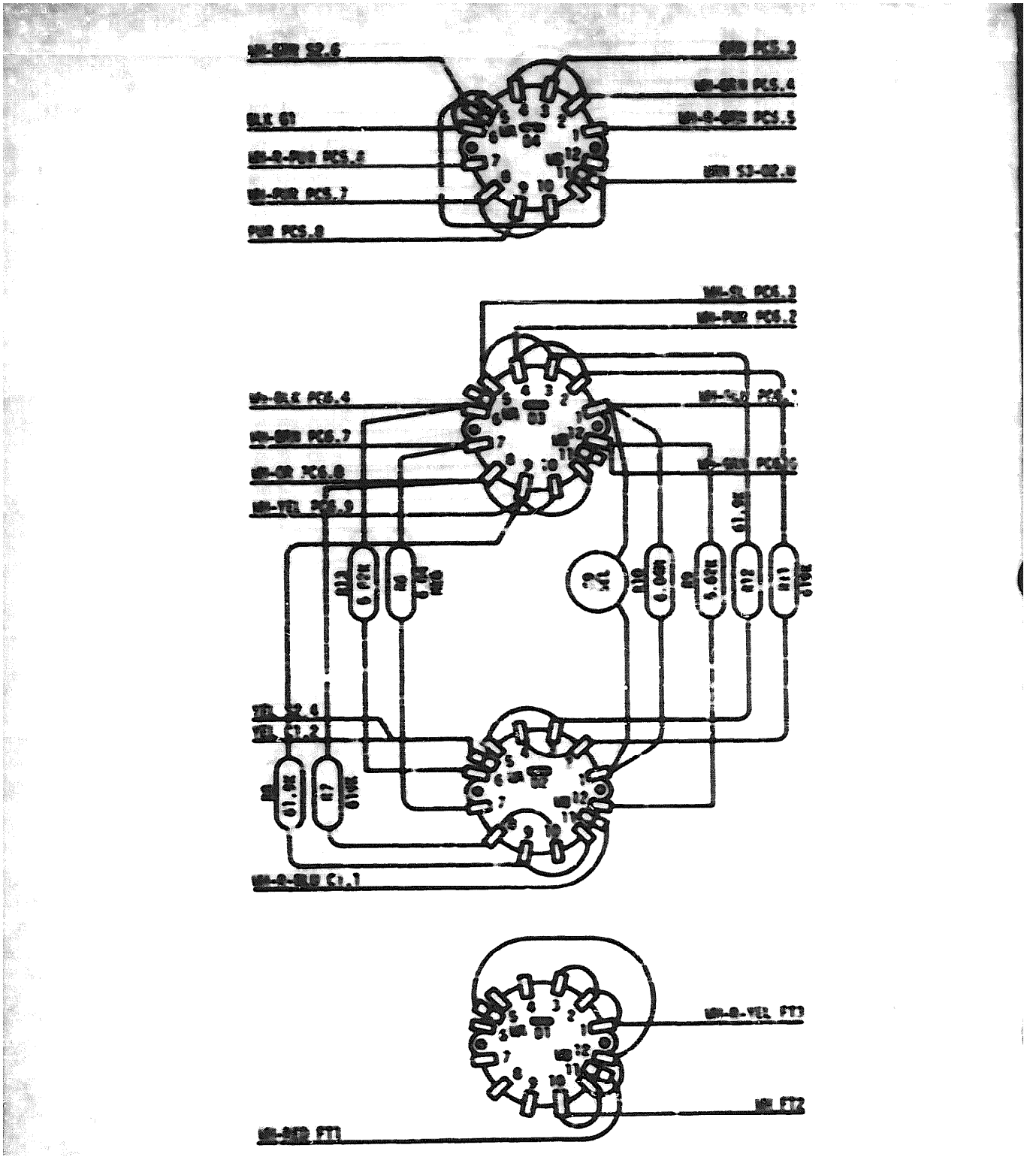

Figure 7-18. Frequency Range Switch, SI - Parts Location and Wiring.

PARTS LIST - FREQUENCY RANGE SWITCH (FIGURE 7-14)

Ref Des	Part Number	FSCM	Description	Qty Assy
S1	8000430033	06815	SWITCH, FREQUENCY RANGE, SEE FIG. 7-1 FOR NHA.	REF
C9	SELECTED VALUE	06819	. CAPACITOR	1
R5	PME65	03888	. RESISTOR 6.04M	2
R10	PME65	03888	. RESISTOR 6.04M	REF
R7	RNR60N6193FS	19701	. RESISTOR 619K	2
R11	RNR60N6193FS	19701	. RESISTOR 619K	REF
R6	RNR60N6192FS	19701	. RESISTOR 61.9K	2
R12	RNR60N6192FS	19701	. RESISTOR 61.9K	REF
R8	RNR60N5621FS	19701	. RESISTOR 5.62K	2
R13	RNR60N5621FS	19701	. RESISTOR 5.62K	REF
S1	A-1268-083	71590	. 4D 2CKT 6 POS P	1

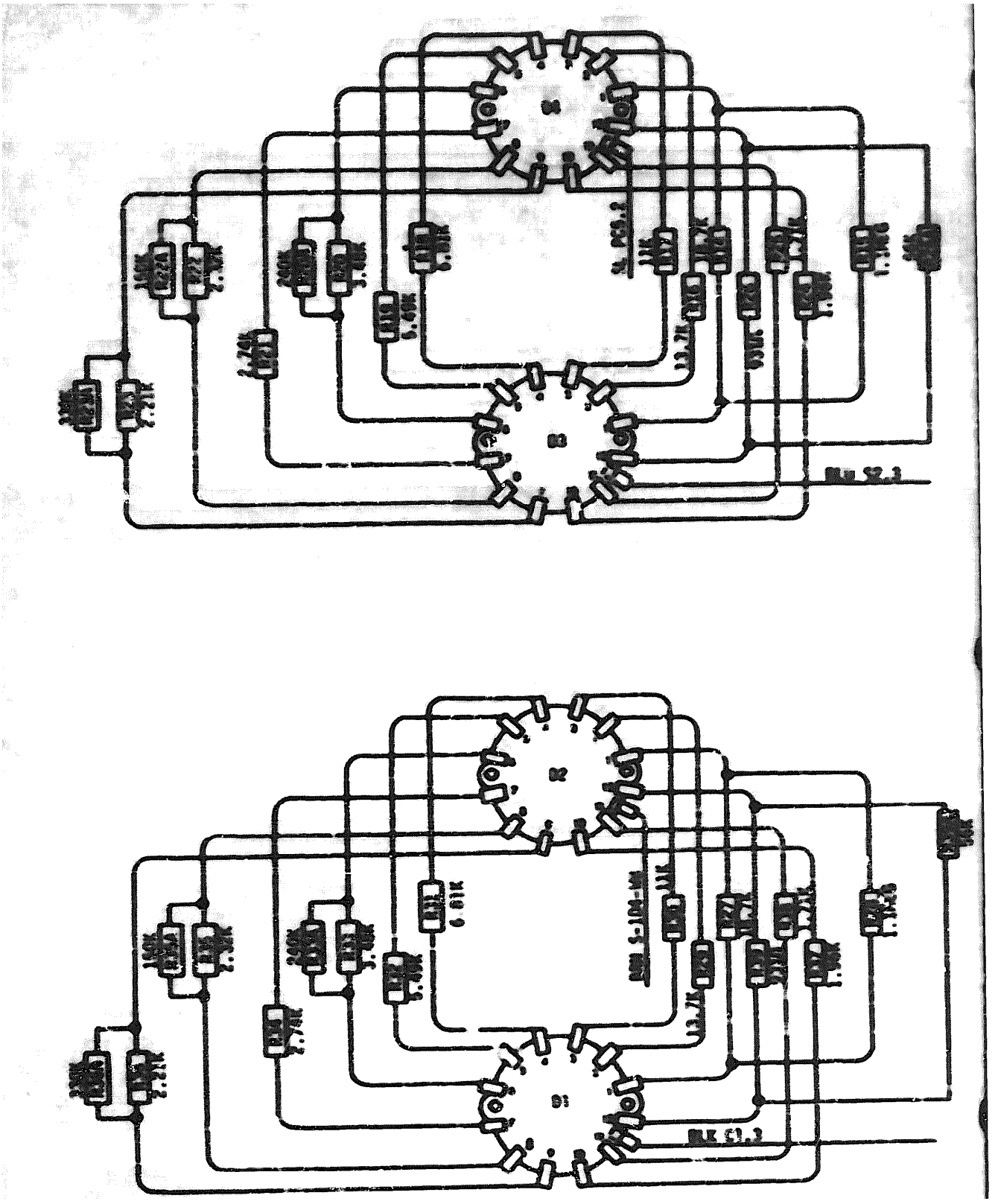

Figure 7-19. Fixed Frequency Switch, S4 - Parts Location and Wiring.

PARTS LIST - FIXED FREQUENCY SWITCH (FIGURE 7-19)

Ref Des	Part Number	FSCM	Description	Qty Assy
S3	8000430034	06819	SWITCH, FIXED FREQUENCY, SEE FIG. 7-1 FOR NHA.	REF
R14	RNR60H1872FS	19701	. RESISTOR 18.7K	2
R27	RNR60H1872FS	19701	. RESISTOR 18.7K	REF
R15	RC20GF115J	01121	. RESISTOR 1.1M	2
R28	RC20GF115J	01121	. RESISTOR 1.1M	REF
R16	RNR60H1372FS	19701	. RESISTOR 13.7K	2
R29	RNR60H1372FS	19701	. RESISTOR 13.7K	REF
R17	RNR60H1102DS	19701	. RESISTOR 11K	2
R30	RNR60H1102DS	19701	. RESISTOR 11K	REF
R18	RNR60H6811DS	19701	. RESISTOR 6.81K	2
R31	RNR60H6811DS	19701	. RESISTOR 6.81K	REF
R19	RNR60H5491DS	19701	. RESISTOR 5.49K	2
R32	RNR60H5491DS	19701	. RESISTOR 5.49K	REF
R20	RNR60H3481FS	19701	. RESISTOR 3.48K	2
R33	RNR60H3481FS	19701	. RESISTOR 3.48K	REF
R20A	RC20GF244J	01121	. RESISTOR 240K	2
R33A	RC20GF244J	01121	. RESISTOR 240K	REF
R21	RNR60H2741DS	19701	. RESISTOR 2.74K	2
R34	RNR60H2741DS	19701	. RESISTOR 2.74K	REF
R22	RNR60H2321FS	19701	. RESISTOR 2.32K	2
R35	RNR60H2321FS	19701	. RESISTOR 2.32K	REF
R22A	RC20GF154J	01121	. RESISTOR 150K	2
R35A	RC20GF154J	01121	. RESISTOR 150K	REF
R23	RNR60H2211FS	19701	. RESISTOR 2.21K	2
R36	RNR60H2211FS	19701	. RESISTOR 2.21K	REF
R23A	RC20GF334K	01121	. RESISTOR 330K	2
R36A	RC20GF334K	01121	. RESISTOR 330K	REF
R24	RNR60H1961DS	19701	. RESISTOR 1.96K	2
R37	RNR60H1961DS	19701	. RESISTOR 1.96K	REF
R25	RNR60H1711DS	19701	. RESISTOR 1.71K	2
R38	RNR60H1711DS	19701	. RESISTOR 1.71K	REF
R26	RNR60H9310FS	19701	. RESISTOR 931 OHMS	2
R39	RNR60H9310FS	19701	. RESISTOR 931 OHMS	REF
R26A	RC20GF563K	01121	. RESISTOR 56K	2
R39A	RC20GF563K	01121	. RESISTOR 56K	REF
S3	A-1268-084	71590	. SWITCH,ROTARY 4	1

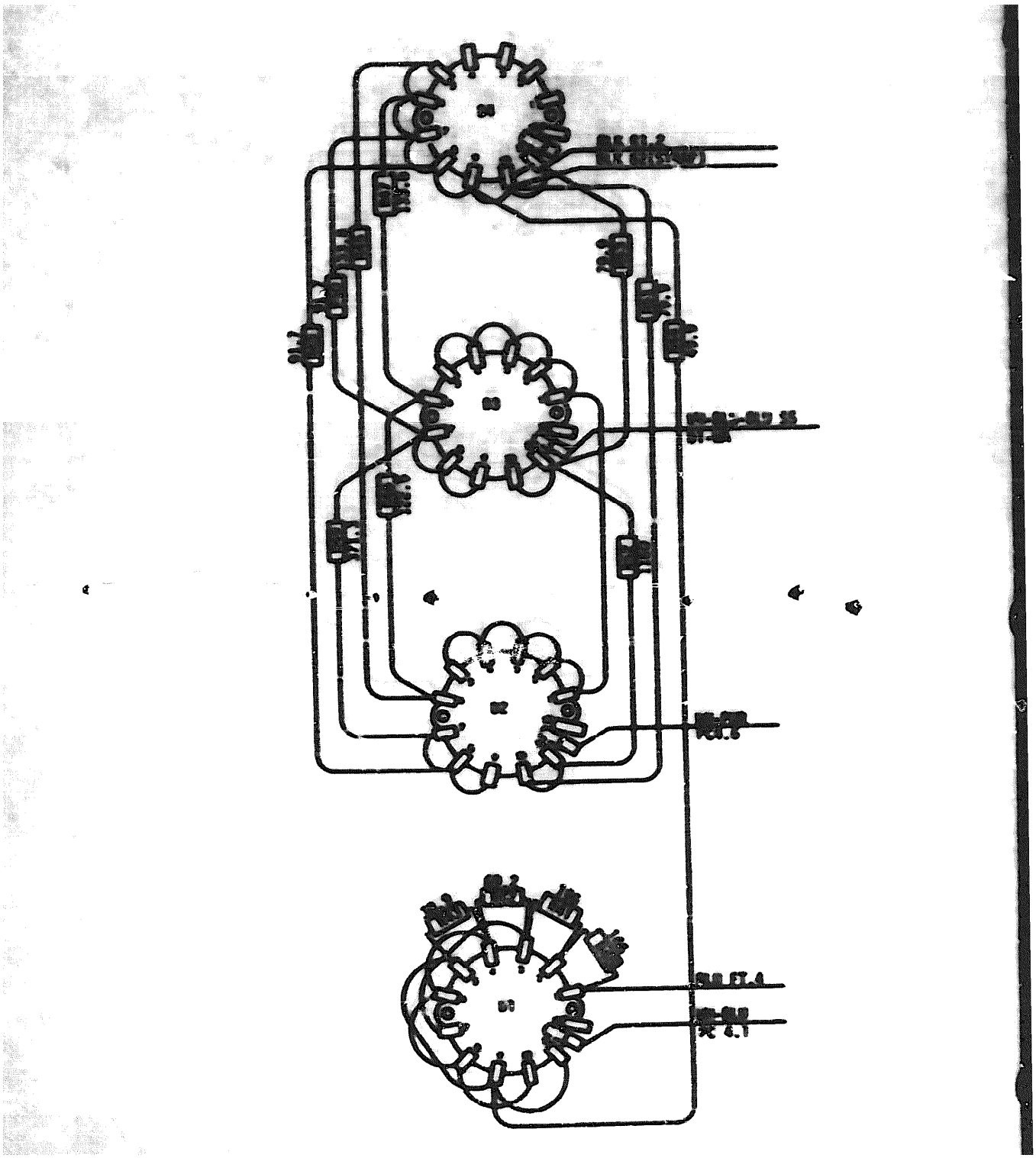

Figure 7-20. Sand Level Switch, S4 - Parts Location and Wiring.

PARTS LIST - LEVEL SWITCH (FIGURE 7-20)

Part Number	FSCM	Description	Qty Assy
0000430035	06819	SWITCH, SFND LEVEL, SEE FIG. 7-1 FOR NHA.	REF
[illegible]146OOS	19701	. RESISTOR 146 OHMS	1
[illegible]196OOS	19701	. RESISTOR 196 OHMS	1
[illegible]69R2OS	19701	. RESISTOR 69.2 OHMS	1
[illegible]38R9OS	19701	. RESISTOR 38.9 OHMS	1
[illegible]49R9OS	19701	. RESISTOR 49.9 OHMS	1
[illegible]134OOS	19701	. RESISTOR 133.8 OHMS	2
[illegible]134OOS	19701	. RESISTOR 133.8 OHMS	REF
[illegible]122R5OS	19701	. RESISTOR 122.5 OHMS	1
[illegible]91R7OS	19701	. RESISTOR 91.7 OHMS	2
[illegible]91R7OS	19701	. RESISTOR 91.7 OHMS	REF
[illegible]371OOS	19701	. RESISTOR 371.3 OHMS	1
[illegible]79.9OS	19701	. RESISTOR 79.9 OHMS	2
[illegible]79.9OS	19701	. RESISTOR 79.9 OHMS	REF
[illegible]118IOS	19701	. RESISTOR 1.18K	1
A-1258-004	71590	. SWITCH,ROTARY 4	1

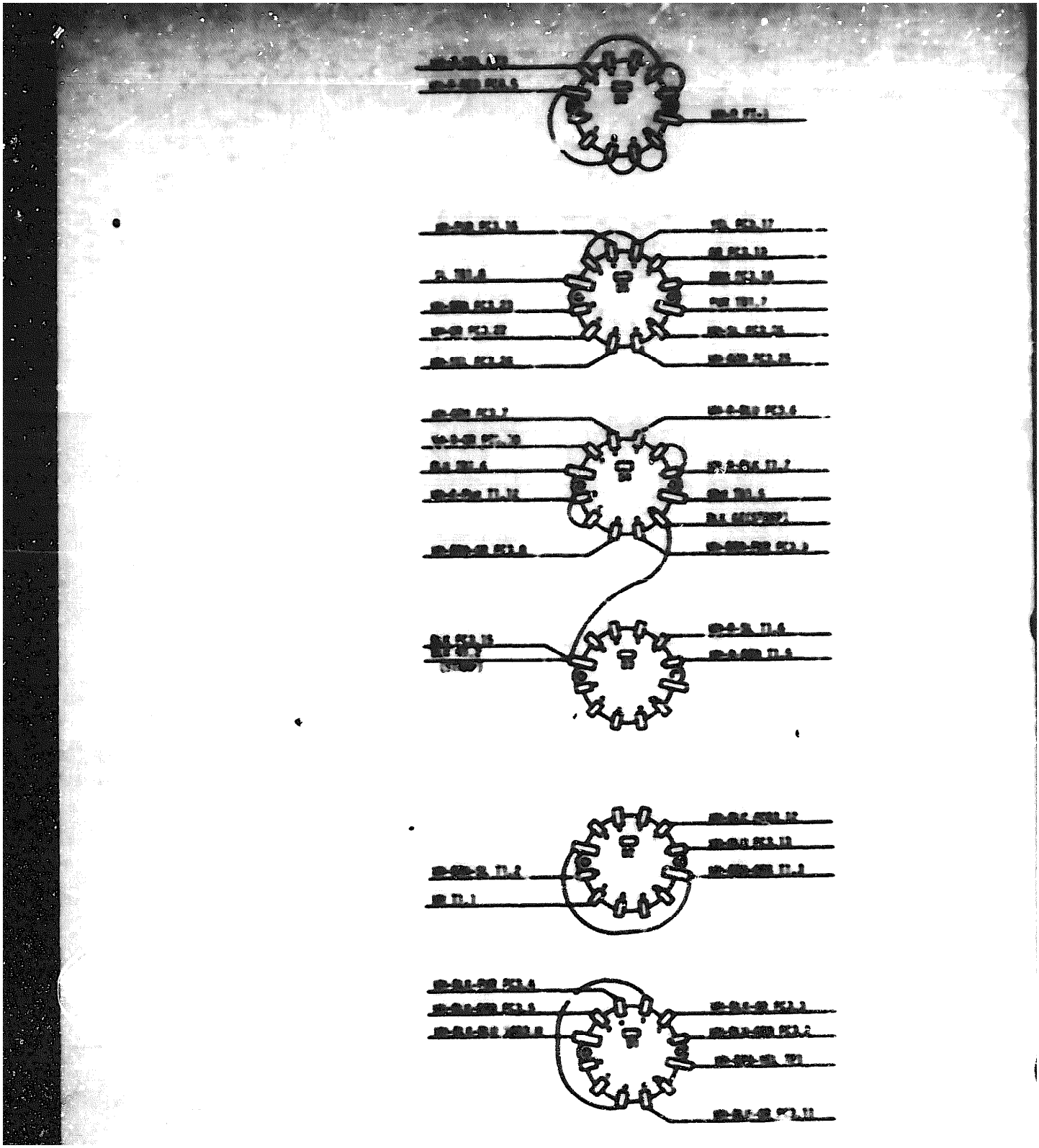

Figure 7-21. Rotary Switch, S5 - Parts Location and Wiring.

PARTS LIST - ROTARY SWITCH (FIGURE 7-21)

Ref Des	Part Number	FSCM	Description	Qty Assy
SS	B0004300 36	06819	SWITCH ASSY,ROTARY SEE FIG. 7-1 FOR NHA.	REF
SS	A-1259-081	71590	. 60 2CKT 5 POS P	1

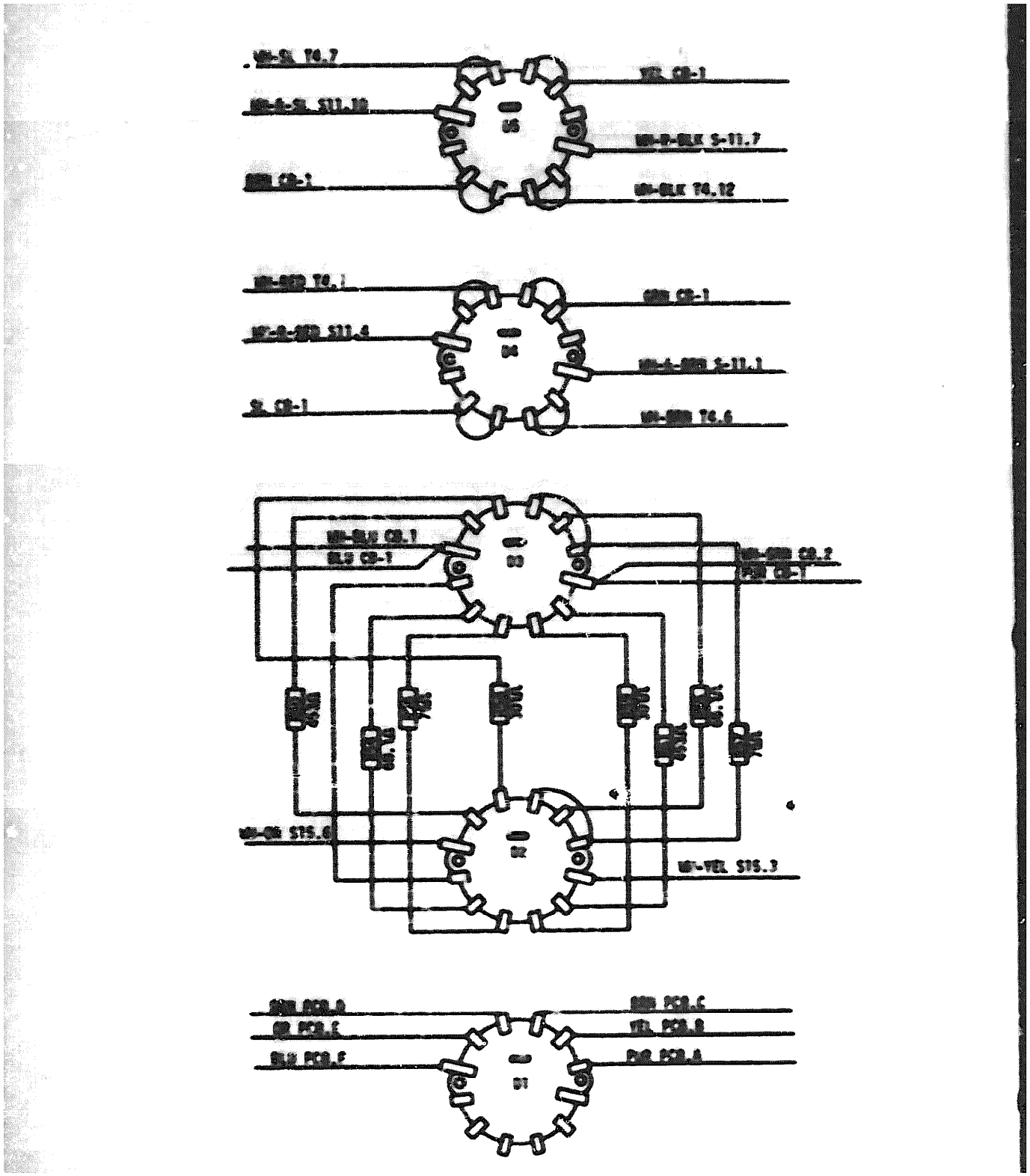

Figure 7-22. Rec. Inp. Switch, S14 - Parts Location and Wiring.

PARTS LIST - REC. IMP. SWITCH (FIGURE 7-22)

Ref Des	Part Number	FSCM	Description	Qty Assy
S14	625300800	06819	SWITCH, REC. IMP, SEE FIG. 7-1 FOR NHA.	REF
R54	RNR60H68R1FS	94322	. RESISTOR 68.1 OHMS	2
R55	RNR60H68R1FS	94322	. RESISTOR 68.1 OHMS	REF
R56	RNR60H75R0FS	19701	. RESISTOR 75 OHMS	2
R57	RNR60H75R0FS	19701	. RESISTOR 75 OHMS	REF
R58	RER60H3010FS	19701	. RESISTOR 301 OHMS	2
R59	RER60H3010FS	19701	. RESISTOR 301 OHMS	REF
R60	RNR60H4530FS	94322	. RESISTOR 453 OHMS	2
R61	RNR60H4530FS	94322	. RESISTOR 453 OHMS	REF
S14	A-1268-322	71590	. SWITCH	1
T6	4009-01-0808	06819	. TRANSFORMER	1

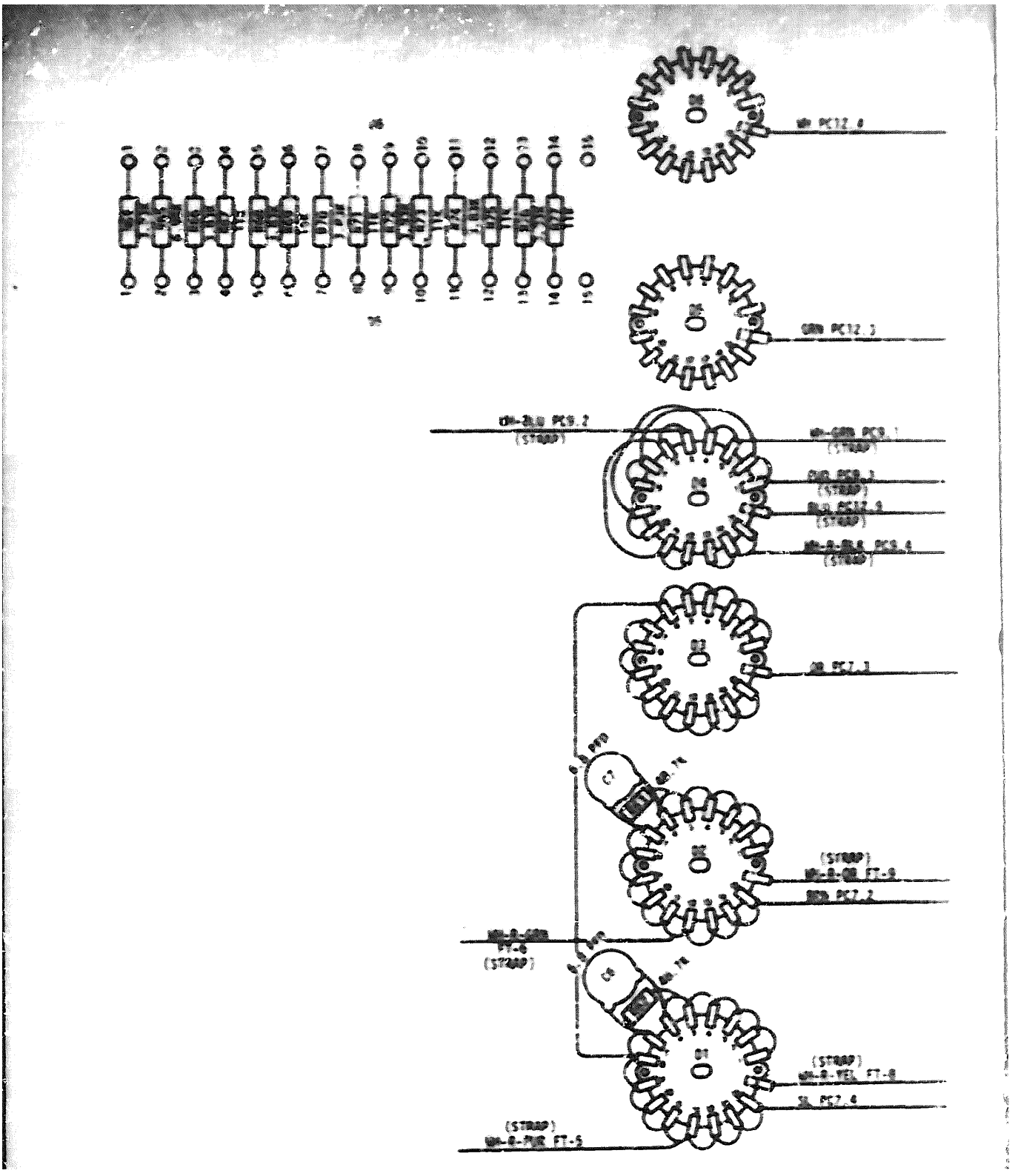

Figure 7-23. Rec. Level Switch, S16 - Parts Location and Wiring.

PARTS LIST - REC. LEVEL SWITCH (FIGURE 7-23)

Ref Des	Part Number	FSCM	Description	Qty Assy
S16	8000430038	06[illegible]	SWITCH, REC LEVEL, SEE FIG. 7-1 FOR NHA.	REF
C6	DD-6R8	7[illegible]	. CAPACITOR 6.8pf 1KV	2
C7	DD-6R8	71590	. CAPACITOR 6.8pf, 1KV	REF
R62	RNR60H4872FS	19701	. RESISTOR 48.7K	2
R63	RNR60H4872FS	19701	. RESISTOR 48.7K	REF
R64	RNR60H3831FS	19701	. RESISTOR 3.83K	7
R66	RNR60H3831FS	19701	. RESISTOR 3.83K	REF
R68	RNR60H3831FS	19701	. RESISTOR 3.83K	REF
R70	RNR60H3831FS	19701	. RESISTOR 3.83K	REF
R72	RNR60H3831FS	19701	. RESISTOR 3.83K	REF
R74	RNR60H3831FS	19701	. RESISTOR 3.83K	REF
R76	RNR60H3831FS	19701	. RESISTOR 3.83K	REF
R65	RNR60H6981FS	19701	. RESISTOR 6.98K	1
R67	RNR60H1102FS	19701	. RESISTOR 11K	5
R71	RNR60H1102FS	19701	. RESISTOR 11K	REF
R73	RNR60H1102FS	19701	. RESISTOR 11K	REF
R75	RNR60H1102FS	19701	. RESISTOR 11K	REF
R77	RNR60H1102FS	19701	. RESISTOR 11K	REF
R69	RNR60H1502FS	19701	. RESISTOR 15K	1
S16	269130-EK8	76854	. SWITCH ROTARY 8	1

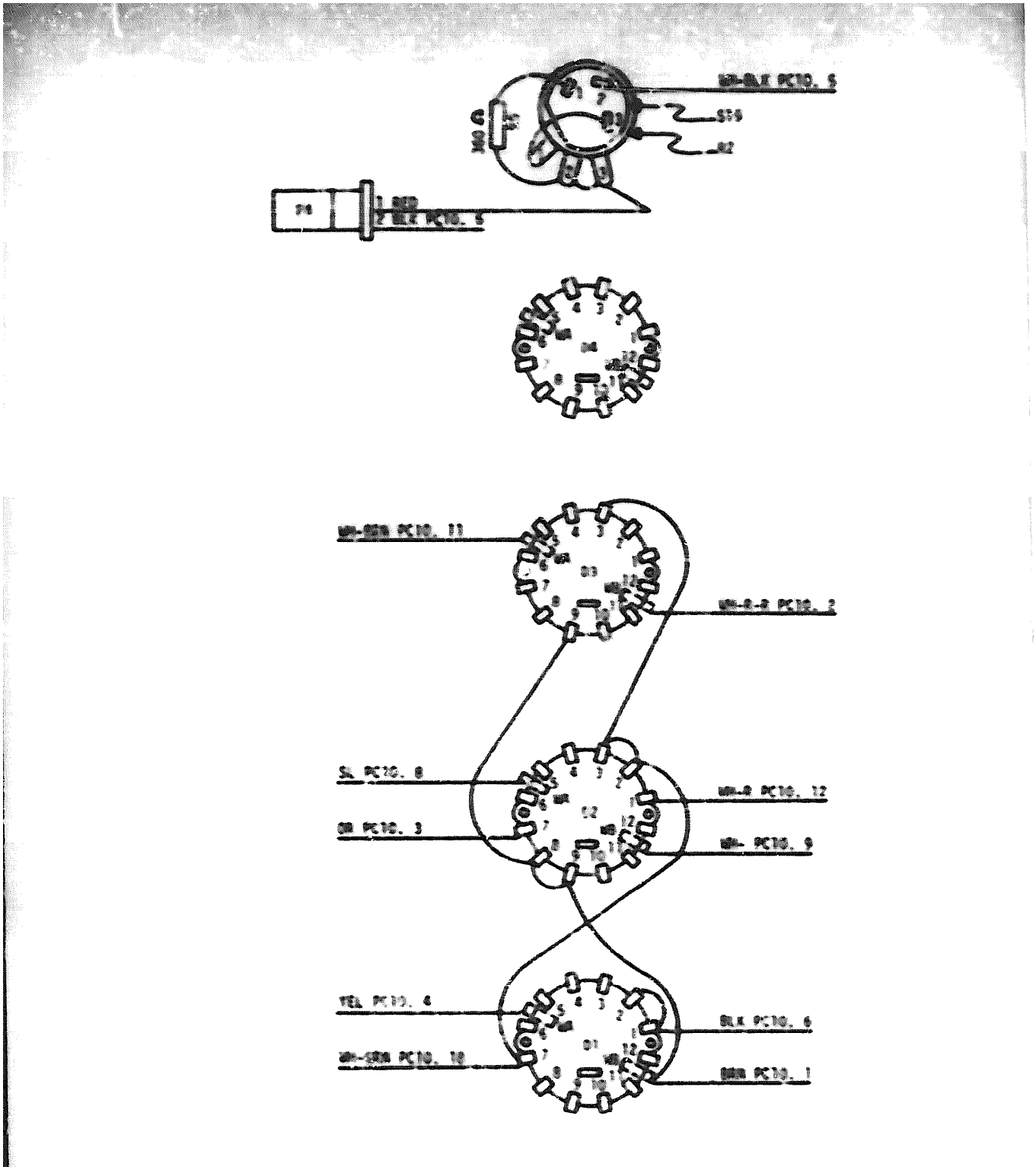

Figure 7-24. Note: Function Switch, S18/S19 - Parts Location and Wiring.

PARTS LIST - METER FUNCTION SWITCH (FIGURE 7-24)

Ref Des	Part Number	FSCM	Description	Qty Assy
S18/19	8000430039	06819	SWITCH,METER FUNCTION,SEE FIG. 7-1 FOR NHA.	REF
R5	RC20GF360OL	01121	. RESISTOR.360 OHMS	1
S18/19	PA-620-046-0AA	76854	. SWITCH,ROTARY	1

7-6. PART NUMBER — NATIONAL STOCK NUMBER CROSS REFERENCE INDEX

PART NUMBER	FSCM	NATIONAL STOCK NUMBER	REPLACED PART NUMBER	FSCM	NATIONAL STOCK NUMBER
A-20	83223		A20	83223	5950-00-153-4988
A130	82389	5935-00-096-9423			
CM15B6+0J	84171		CM15FD680G03	81349	5910-00-632-5724
4D-27359	13606	5910-00-849-5604			
RC07BF334K	01121	5905-00-223-0383			
RC07BF563K	01121		RC07GF563J8	81349	5905-00-106-1357
ST12A	31356	5930-00-133-8614			
TE1160	13606		TE1160	56289	5920-00-431-6162
TB-1274	06819		TB1274	06819	5950-00-864-9962
TVA-1304	13606		CE11C1006	81349	5910-00-702-6410
T330A226K006AS	31433		T330A226K006AS	05397	5910-00-762-8563
10TCC-V22	13606		10TCCV22	56289	5910-00-989-3595
1738	14100	5930-00-844-7644			
2N3903	15873		2N3903	15873	5961-00-083-3317
2N3905	15873		2N3905	80131	5961-00-847-9762
2TB-550	13606		2TB550	56289	5910-00-991-3543
2428-9015	13606		8B6-90511	81349	5905-00-995-1133
2918	81073	5940-00-577-3695			
2918	81073	5940-00-817-4980			
3AG	75915		FE14-19	28873	5920-00-280-9328
3200C5030	06819	5920-00-023-4784			
5J-1192	82389		5J1192	82389	5935-00-899-9029
5J-1194	82389	5935-00-899-9037			
5J-1329	82389		5J1329	82389	5935-00-937-9602
72012	09353	5935-00-007-3968			
7301	09353	5930-00-089-3860			

APPENDIX A

REFERENCES

Following is a list of applicable publications that are available to operator and organizational maintenance manual of the TS-3469/U.

Form 310-4	Index of Technical Publications: Technical Manuals, Technical Bulletins, Supply Bulletins, and Lubrication Orders.
Form 310-7	US Army Equipment Index of Modification Work Orders.
9-0113	Field Instructions for Painting and Preserving Electronics Command Equipment Including Camouflage Pattern Painting of Electrical Equipment Shelters.
11-6140-203-14-2	Operator's, Organizational, Direct Support and General Support Maintenance Manual for Aircraft Nickel Cadmium Batteries.
11-6625-320-12	Operator and Organizational Maintenance Manual: Voltmeter, Meter ME-30A/U and Voltmeters, Electronic ME-30B/U, ME-30C/U, and ME-30E/U.
11-6625-654-14	Operators, Organizational, Direct Support, and General Support Maintenance Repair Parts and Special Tools Lists (including Depot Maintenance Repair Parts and Special Tools Lists) for Multimeter AN/USM-223.
11-6625-665-15	Organizational, Direct Support, General Support, and Depot Maintenance Manual: Generator Signal AN/USM-205.
11-6625-1576-15	Organizational, Direct Support, General Support, and Depot Maintenance Manual: Distortion Analyzer, Hewlett-Packard Models 333A and 334A (AN/URM-184A).
11-6625-2658-14	Operator's, Organizational, Direct Support, and General Support Maintenance Manual for Oscilloscope AN/USM-281C
38-750	The Army Maintenance Management System (TAMMS).
43-0139	Painting Instructions for Field Use.
750-244-2	Procedures for Destruction of Electronics Material to Prevent Enemy Use (Electronics Command)

APPENDIX D

MAINTENANCE ALLOCATION

Section I. INTRODUCTION

D-1. General

[illegible] appendix provides a summary of the maintenance [illegible] for TS-3402. It authorizes categories of [illegible]tenance for specific maintenance functions on repairable items and components and the tools and equipment required to perform each function. This appendix may be used as an aid in planning maintenance [illegible].

D-2. Maintenance Function

[illegible]tenance functions will be limited to and defined [illegible] follows:

[illegible]. *Inspect.* To determine the serviceability of an [illegible] by comparing its physical, mechanical, and/or [illegible]rical characteristics with established standards through examination.

[illegible]. *Test.* To verify serviceability and to detect incipient failure by measuring the mechanical or electrical characteristics of an item and comparing those characteristics with prescribed standards.

[illegible]. *Service.* Operations required periodically to keep [illegible] in proper operating condition, i.e., to clean (decontaminate), to preserve, to drain, to paint, or to replenish fuel, lubricants, hydraulic fluids, or compressed air supplies.

[illegible]. *Adjust.* To maintain, within prescribed limits, by bringing into proper or exact position, or by setting the operating characteristics to the specified parameters.

[illegible]. *Align.* To adjust specified variable elements of an [illegible] to bring about optimum or desired performance.

[illegible]. *Calibrate.* To determine and cause corrections to be made or to be adjusted on instruments or test measuring and diagnostic equipments used in precision measurement. Consists of comparisons of two instruments, one of which is a certified standard of known accuracy, to detect and adjust any discrepancy in the accuracy of the instrument being compared.

[illegible]. *Install.* The act of emplacing, seating, or fixing into position an item, part, module (component or assembly) in a manner to allow the proper functioning of equipment or system.

[illegible]. *Replace.* The act of substituting a serviceable like item, part, subassembly, or module (component or assembly) for an unserviceable counterpart.

[illegible]. *Repair.* The application of maintenance services (inspect, test, service, adjust, align, calibrate, replace) or other maintenance actions (welding, grinding, riveting, straightening, fitting, remachining, or resurfacing) to restore serviceability to an item by correcting specific damage, fault, malfunction, or failure in a part, subassembly, module (component or assembly), end item, or system.

j. Overhaul. That maintenance effort (servicing/action) necessary to restore an item to a completely serviceable/operational condition as prescribed by maintenance standards (i.e., DMWR) in appropriate technical publications. Overhaul is normally the highest degree of maintenance performed by the Army. Overhaul does not normally return an item to like new condition.

k. Rebuild. Consists of those services/actions necessary for the restoration of unserviceable equipment to a like new condition in accordance with original manufacturing standards. Rebuild is the highest degree of material maintenance applied to Army equipment. The rebuild operation includes the act of returning to zero those age measurements (hours, miles, etc.) considered in classifying Army equipment/components.

D-3. Columns Entries

a. Column 1, Group Number. Column 1 lists group numbers, the purpose of which is to identify components, assemblies, subassemblies, and modules with the next higher assembly.

b. Column 2, Component/Assembly. Column 2 contains the noun names of components, assemblies, subassemblies, and modules for which maintenance is authorized.

c. Column 3, Maintenance Functions. Column 3 lists the functions to be performed on the item listed in column 2. When items are listed without maintenance functions, it is solely for purpose of having the group numbers in the MAC and RPSTL coincide.

d. Column 4, Maintenance Category. Column 4 specifies, by the listing of a "worktime" figure in the appropriate subcolumn(s), the lowest level of maintenance authorized to perform the function listed in column 3. This figure represents the active time required to perform that maintenance function at the indicated category of maintenance. If the number or complexity of the tasks within the listed maintenance function

vary at different maintenance categories, appropriate "worktime" figures will be shown for each category. The number of task-hours specified by the "worktime" figure represents the average time required to restore an item (assembly, subassembly, component, module, and item or system) to a serviceable condition under typical field operating conditions. This time includes preparation time, troubleshooting time, and quality assurance/quality control time in addition to the time required to perform the specific tasks identified for the maintenance functions authorized in the maintenance allocation chart. Subcolumns of column 4 are as follows:

C—Operator/Crew
O—Organizational
F—Direct Support
H—General Support
D—Depot

e. Column 5, Tools and Equipment. Column 5 specifies by code, those common tool sets (not individual tools) and special tools, test, and support equipment required to perform the designated function.

f. Column 6, Remarks. Column 6 contains an alphabetic code which leads to the remark in section IV, Remarks, which is pertinent to the item opposite the particular code.

D - 4. Tool and Test Equipment Requirements (sec III)

a. Tool or Test Equipment Reference Code. The numbers in this column coincide with the numbers used in the tools and equipment column of the M. The numbers indicate the applicable tool or test equipment for the maintenance functions.

b. Maintenance Category. The codes in this column indicate the maintenance category allocated the tool or test equipment.

c. Nomenclature. This column lists the noun name and nomenclature of the tools and test equipment required to perform the maintenance functions.

d. National/NATO Stock Number. This column lists the National/NATO stock number of the specific tool or test equipment.

e. Tool Number. This column lists the manufacturer's part number of the tool followed by the Federal Supply Code for manufacturers (5-digit) in parenthesis.

D-5. Remarks (sec IV)

a. Reference Code. This code refers to the appropriate item in section II, column 6.

b. Remarks. This column provides the required explanatory information necessary to clarify items appearing in section II.

(Next printed page is D-3)

SECTION II [illegible]

[illegible]

(1) GROUP NUMBER	(2) COMPONENT/ASSEMBLY	(3) MAINTENANCE FUNCTION	(4) MAINTENANCE CATEGORY					(5) TOOLS AND EQUIPMENT	(6) REMARKS
			C	O	F	H	D		
[illegible]	[illegible]	[illegible]		[illegible]		[illegible]	[illegible]	[illegible]	

SECTION III TOOL AND TEST EQUIPMENT REQUIREMENTS
F O R
TEST CWR [redacted]

TOOL OR TEST EQUIPMENT REF. CODE	MAINTENANCE CATEGORY	NOMENCLATURE	NATIONAL STOCK NUMBER	TOOL NUMBER
1	[redacted]	[redacted]	[redacted]	
2	[redacted]	[redacted]	[redacted]	
3	[redacted]	[redacted]	[redacted]	
4	[redacted]	[redacted]	[redacted]	
5	[redacted]	[redacted]	[redacted]	
6	[redacted]	[redacted]	[redacted]	
7	[redacted]	[redacted]	[redacted]	
8	[redacted]	[redacted]		

[redacted]

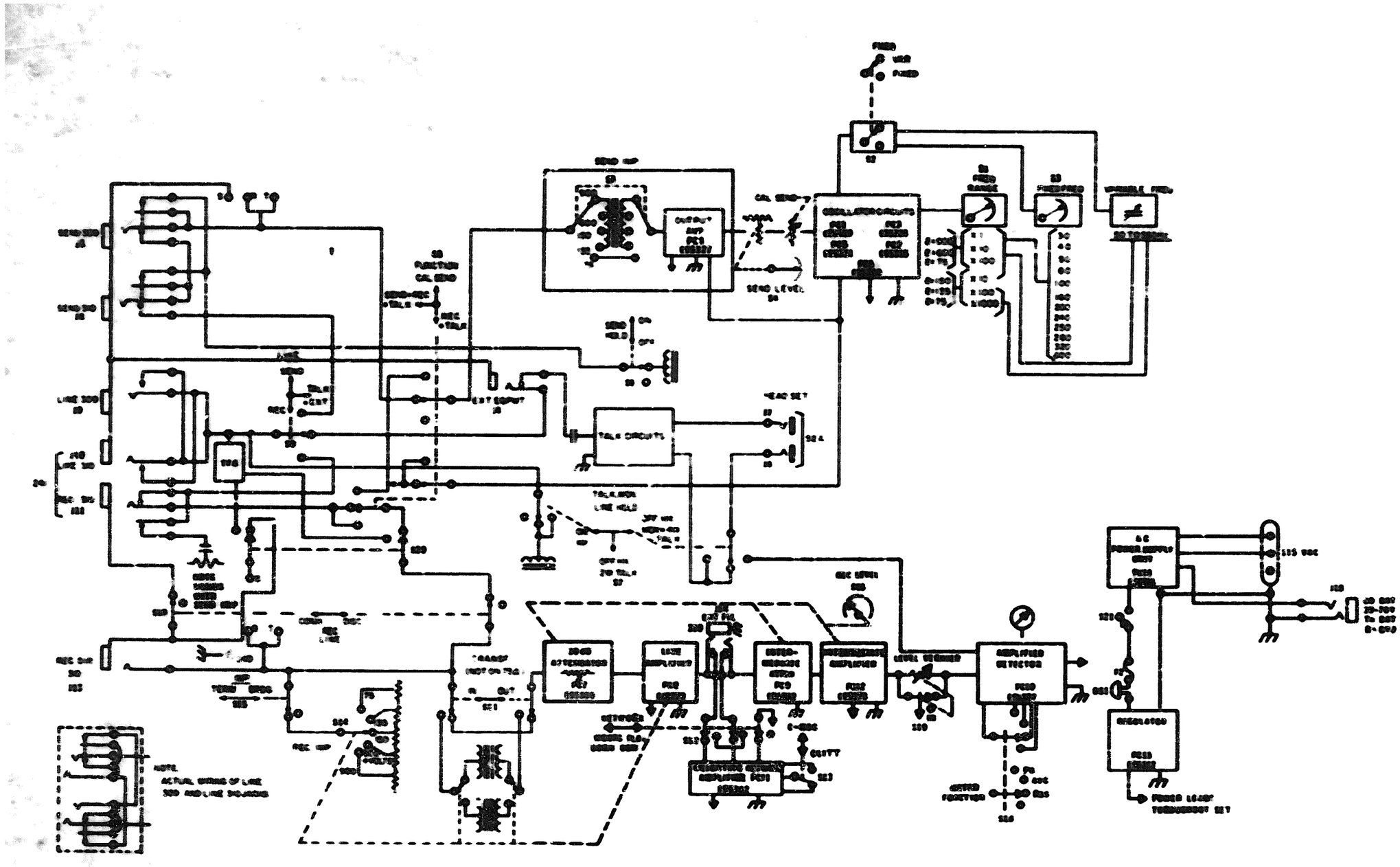

Figure FO-1. Block Diagram, IT3-4CR

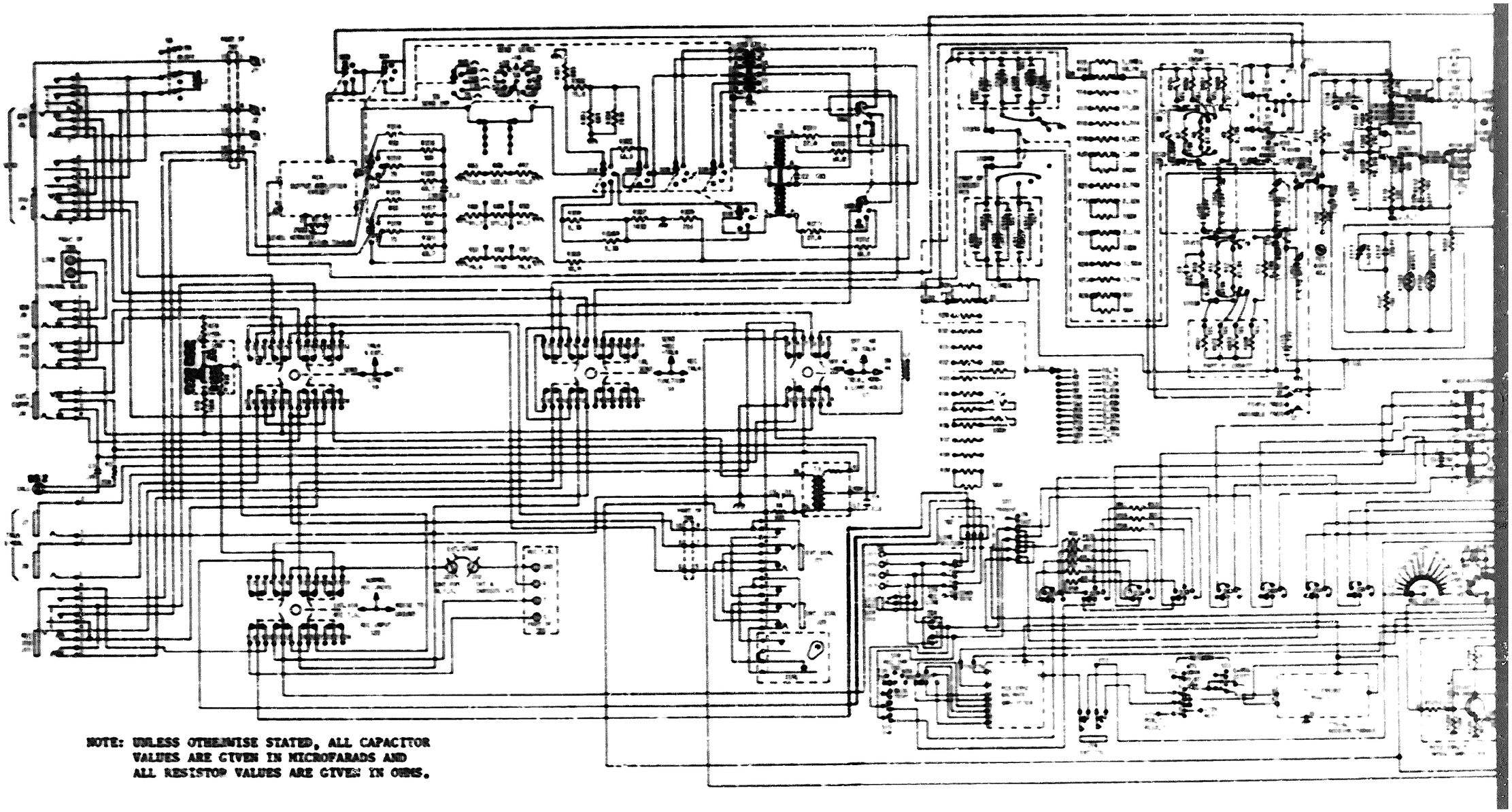

NOTE: UNLESS OTHERWISE STATED, ALL CAPACITOR VALUES ARE GIVEN IN MICROFARADS AND ALL RESISTOR VALUES ARE GIVEN IN OHMS.

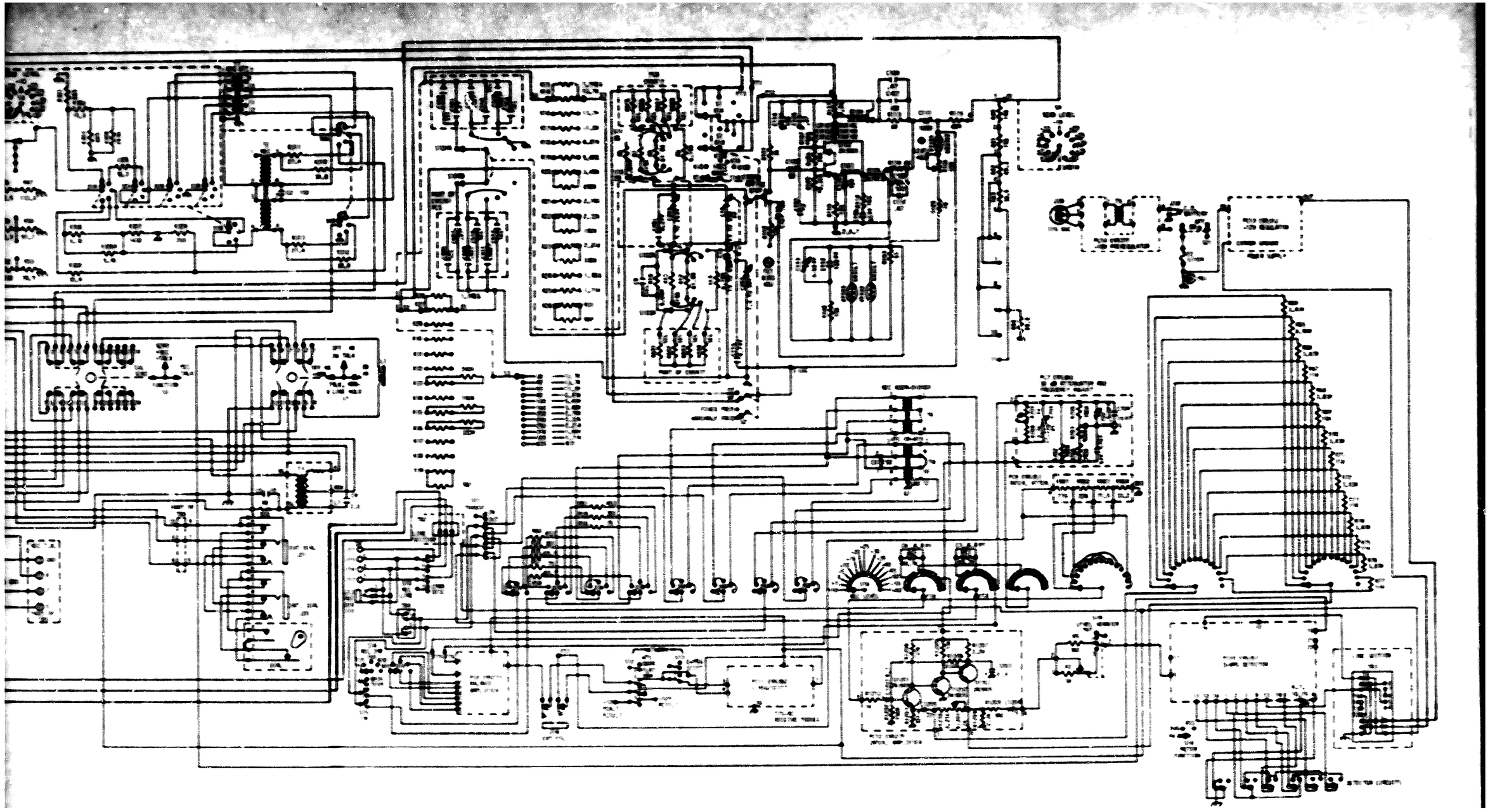

Figure FO-2. Schematic Diagram, TTS-4CR

RECOMMENDED CHANGES TO EQUIPMENT TECHNICAL MANUALS

SOMETHING WRONG WITH THIS MANUAL?

THEN . . . JOT DOWN THE DOPE ABOUT IT ON THIS FORM, TEAR IT OUT, FOLD IT AND DROP IT IN THE MAIL!

FROM: (YOUR NAME, GRADE, ORGANIZATION, COMPLETE ADDRESS)
Commander
Stateside Army Depot
ATTN: AMSTA-US
Stateside, N.J. 07703

DATE: 10 July 1975

PUBLICATION NUMBER	DATE	TITLE
TM 11-5840-340-12	23 Jan 74	Radar Set AN/MPS-76

BE EXACT. PIN-POINT WHERE IT IS — IN THIS SPACE TELL WHAT IS WRONG AND WHAT SHOULD BE DONE ABOUT IT.

PAGE NO.	PARA GRAPH	FIGURE NO.	TABLE NO.	
2-25	2-26			Recommend that the installation antenna alignment procedure be changed through [illegible] to specify a 2° IFF antenna lag rather than 1°. REASON: Experience has shown that with only a 1° lag, the antenna servo system is too sensitive to wind gusting in excess of [illegible] knots, and has a tendency to rapidly accelerate and decelerate as it hunts, causing strain to the drive train. Hunting is minimized by adjusting the lag to 2° without degradation of operation.
3-10	3-3		3-1	Item 5, Function column. Change "2 db" to "3db." REASON: The adjustment procedure for the TRANS POWER FAULT indicator calls for a 3 db (500 watts) adjustment to light the TRANS POWER FAULT indicator.
5-6	5-8			Add new step f.1 to read, "Replace cover plate removed in step e.1, above." REASON: To replace the cover plate.
		FO3		Zone C 3. On J1-2, change "+24 VDC to "+5 VDC." REASON: This is the output line of the 5 VDC power supply. + 24 VDC is the input voltage.

TYPED NAME, GRADE OR TITLE, AND TELEPHONE NUMBER: SSG I. M. DeSpiritof 999-1776

SIGN HERE: SSG I.M. DeSpiritof

DA FORM 1 JUL 68 2028-2

P.S.—IF YOUR OUTFIT WANTS TO KNOW ABOUT YOUR MAIL, TELL US. MAKE A CARBON COPY OF THIS AND GIVE IT TO YOUR HEADQUARTERS.

HISA 1686-75

RECOMMENDED CHANGES TO EQUIPMENT TECHNICAL MANUALS

SOMETHING WRONG WITH THIS MANUAL?

THEN . . . JOT DOWN THE DOPE ABOUT IT ON THIS FORM, TEAR IT OUT, FOLD IT AND DROP IT IN THE MAIL.

FROM: (YOUR UNIT'S COMPLETE ADDRESS)

DATE

PUBLICATION NUMBER	DATE	TITLE
TM 11-6625-2753-14&P	7 Sep 76	

BE EXACT . . . PIN-POINT WHERE IT IS

PAGE NO.	PARA-GRAPH	FIGURE NO.	TABLE NO.

IN THIS SPACE TELL WHAT IS WRONG AND WHAT SHOULD BE DONE ABOUT IT:

TYPED NAME, GRADE OR TITLE, AND TELEPHONE NUMBER

SIGN HERE:

DA FORM 2028-2

P.S.—IF YOUR OUTFIT WANTS TO KEEP ABOUT YOUR MANUAL "PUBS," MAKE A CARBON COPY OF THIS AND GIVE IT TO YOUR HEADQUARTERS.

TEAR ALONG DOTTED LINE

FILL IN YOUR UNIT'S ADDRESS

FOLD BACK

DEPARTMENT OF THE ARMY

OFFICIAL BUSINESS

PENALTY FOR PRIVATE USE, $300

POSTAGE AND FEES PAID
DEPARTMENT OF THE ARMY
DOD-314

Commander
US Army Electronics Command
ATTN: [illegible]-HS-Q
Fort Monmouth, New Jersey 07703

FOLD BACK

REVERSE OF DA FORM [illegible]

RECOMMENDED CHANGES TO EQUIPMENT TECHNICAL MANUALS

SOMETHING WRONG WITH THIS MANUAL?

THEN . . JOT DOWN THE DOPE ABOUT IT ON THIS FORM, TEAR IT OUT, FOLD IT AND DROP IT IN THE MAIL!

FROM: (YOUR UNIT'S COMPLETE ADDRESS)

DATE

PUBLICATION NUMBER	DATE	TITLE
TM 11-6625-2753-14&P	7 SEP 78	

BE EXACT . . PIN-POINT WHERE IT IS

PAGE NO.	PARA GRAPH	FIGURE NO.	TABLE NO.

IN THIS SPACE TELL WHAT IS WRONG AND WHAT SHOULD BE DONE ABOUT IT:

TYPED NAME, GRADE OR TITLE, AND TELEPHONE NUMBER

SIGN HERE:

DA FORM 1 JUL 70 2028-2

P.S.—IF YOUR OUTFIT WANTS TO KNOW ABOUT YOUR MANUAL "THIS," MAKE A CARBON COPY OF THIS AND GIVE IT TO YOUR HEADQUARTERS.

TEAR ALONG DOTTED LINE

FILL IN YOUR UNIT'S ADDRESS

FOLD BACK

DEPARTMENT OF THE ARMY

OFFICIAL BUSINESS

PENALTY FOR PRIVATE USE, $300

POSTAGE AND FEES PAID
DEPARTMENT OF THE ARMY
DOD-314

Commander
US Army Electronics Command
ATTN: DRSEL-NR-Q
Fort Monmouth, New Jersey 07703

FOLD ALONG DOTTED LINE

FOLD BACK

REVERSE OF DA FORM 2028-2

RECOMMENDED CHANGES TO EQUIPMENT TECHNICAL MANUALS

SOMETHING WRONG WITH THIS MANUAL?

THEN . . JOT DOWN THE GOPE ABOUT IT ON THIS FORM, TEAR IT OUT, FOLD IT AND DROP IT IN THE MAIL!

FROM: (YOUR UNIT'S COMPLETE ADDRESS)

DATE

PUBLICATION NUMBER: TM 11-6625-2753-14&P

DATE: 7 Sep 76

TITLE:

BE EXACT . . PIN-POINT WHERE IT IS

PAGE NO.	PARA GRAPH	FIGURE NO.	TABLE NO.

IN THIS SPACE TELL WHAT IS WRONG AND WHAT SHOULD BE DONE ABOUT IT:

TYPED NAME, GRADE OR TITLE, AND TELEPHONE NUMBER

SIGN HERE:

TEAR ALONG DOTTED LINE

DA FORM 2028-2

P.S.—IF YOUR OUTFIT WANTS TO KNOW ABOUT YOUR MANUAL "PUB," MAKE A CARBON COPY OF THIS AND GIVE IT TO YOUR HEADQUARTERS.

FILL IN YOUR UNIT'S ADDRESS

FOLD BACK

DEPARTMENT OF THE ARMY

OFFICIAL BUSINESS

PENALTY FOR PRIVATE USE, $300

POSTAGE AND FEES PAID
DEPARTMENT OF THE ARMY
DOD-314

Commander
US Army Electronics Command
ATTN: DRSEL-NA-Q
Fort Monmouth, New Jersey 07703

FOLD BACK

FOLD ALONG DOTTED LINE

REVERSE OF DA FORM 2028-2

By Order of the Secretary of the Army:

BERNARD W. ROGERS
General, United States Army
Chief of Staff

Official:

J. C. PENNINGTON
Brigadier General, United States Army
The Adjutant General

Distribution:

Active Army:
TSG (1)
USAAMCOM (1)
TRADOC (2)
USAMSCOM (2)
DARCOM (1)
TECOM (2)
6th Maj Comd (2)
Armies (1)
USASOC (10)
Sve College (1)
HQ, 7th Sig Comd (2)
Ft Monmouth (CERCOM) (2)
Fort Huachuca (2)
Fort Gillem (10)
Fort Carson (2)
Ft Richardson (CERCOM) (1)
WSMR (1)
USAEUMAA (1)
USAEUDAW (1)

NG: None
USAR: None
For explanation of abbreviations used, see AR 310-50.

Army Dep (1) except:
LEAD (10)
SAAD (20)
TOAD (14)
SHAD (3)
USA Dep (1)
Sig Sve: USA Dep (1)
USAOC (2)
USAOC-EUR (2)
USAOC-PAC (2)
USAOC-A (2)
USAOC-SO (2)
Units org under fol TOE:
(1 cy unit UNOMSC)
29-134
29-136
29-237 (2)
29-610 (2)

☆ U.S. GOVERNMENT PRINTING OFFICE: 1979— 703-120/[illegible]

DEPARTMENT OF THE ARMY
US ARMY AG PUBLICATIONS CENTER
1655 WOODSON ROAD
ST. LOUIS, MISSOURI 63114

OFFICIAL BUSINESS
PENALTY FOR PRIVATE USE $300

POSTAGE AND FEES PAID
DEPARTMENT OF THE ARMY
DOD 314

END

03-20-83

DATE

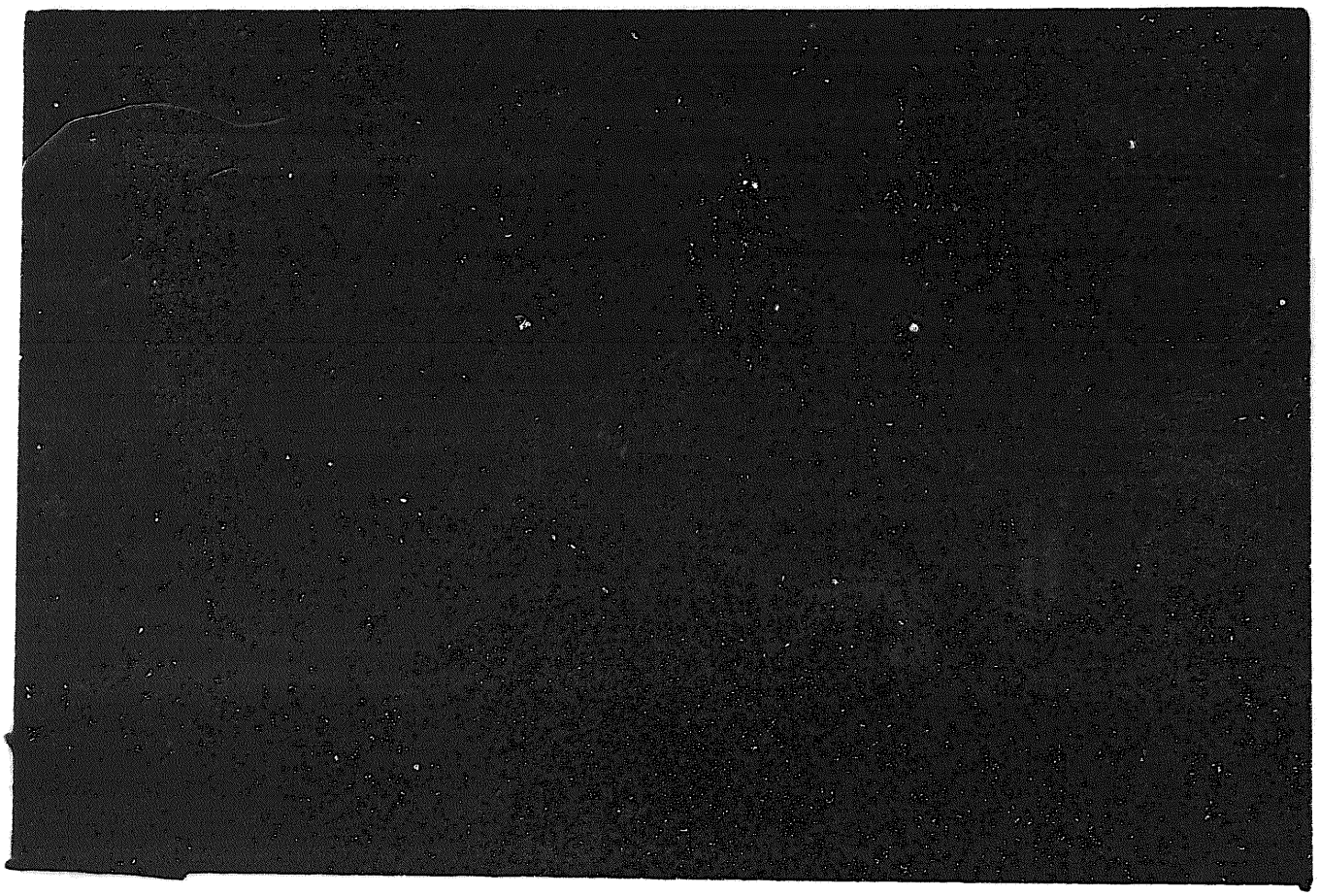

DEPARTMENT OF THE ARMY

MICROFORM

TEST TARGET

150 MM

2.0 mm (e= 1.37 mm)

ABCDEFGHIJKLMNOPQRSTUVWXYZ

abcdefghijklmnopqrstuvwxyz

1234567890¢£/%&½¼¾—=+×&@*

2.5 mm (e= 1.77 mm)

ABCDEFGHIJKLMNOPQRSTUVWXYZ

abcdefghijklmnopqrstuvwxyz

1234567890¢£/%&½¼¾—=+×&@*

200 MM

250 MM